

COMBIVERT **F6**

INSTRUCTIONS FOR USE | **INSTALLATION F6 HOUSING 7**

Translation of the original manual
Document 20199655 EN 10

Preface

The hardware and software described in this document are products of KEB. The information contained in this document is valid at the time of publishing. KEB reserves the right to update this document in response to misprints, mistakes or technical changes.

Signal words and symbols

Certain procedures within this document can cause safety hazards during the installation or operation of the device. Refer to the safety warnings in this document when performing these procedures. Safety signs are also located on the device where applicable. A safety warning is marked by one of the following warning signs:

⚠ DANGER	Dangerous situation, which will cause death or serious injury iif this safety warning is ignored.
⚠ WARNING	Dangerous situation, which may cause death or serious injury if this safety warning is ignored.
⚠ CAUTION	Dangerous situation, which may cause minor injury if this safety warning is ignored.
NOTICE	Situation, which can cause damage to property if this safety warning is ignored.

RESTRICTION

Used when the following statements depend on certain conditions or are only valid for certain ranges of values.



Used for informational messages or recommended procedures.

More symbols

►	This arrow starts an action step.
• / -	Enumerations are marked with dots or indents.
=>	Cross reference to another chapter or another page.



Note to further documentation.
https://www.keb-automation.com/search

Laws and guidelines

KEB Automation KG confirms with the EC declaration of conformity and the CE mark on the device nameplate that it complies with the essential safety requirements.

The EC declaration of conformity can be downloaded on demand via our website.

Warranty and liability

The warranty and liability on design, material or workmanship for the acquired device is given in the general sales conditions.



Here you will find our general sales conditions.
https://www.keb-automation.com/terms-conditions

Further agreements or specifications require a written confirmation.

Support

Although multiple applications are referenced, not every case has been taking into account. If you require further information or if problems occur which are not referenced in the documentation, you can request the necessary information via the local KEB agency.

The use of our units in the target products is outside of our control and therefore lies exclusively in the area of responsibility of the customer.

The information contained in the technical documentation, as well as any user-specific advice in spoken and written and through tests, are made to best of our knowledge and information about the intended use. However, they are regarded as being only informal and changes are expressly reserved, in particular due to technical changes. This also applies to any violation of industrial property rights of a third-party. Selection of our units in view of their suitability for the intended use must be done generally by the user.

Tests can only be done within the intended end use of the product (application) by the customer. They must be repeated, even if only parts of hardware, software or the unit adjustment are modified.

Copyright

The customer may use the instructions for use as well as further documents or parts from it for internal purposes. Copyrights are with KEB and remain valid in its entirety.

This KEB product or parts thereof may contain third-party software, including free and/or open source software. If applicable, the license terms of this software are contained in the instructions for use. The instructions for use are already available to you, can be downloaded free of charge from the KEB website or can be requested from the respective KEB contact person.

Other wordmarks or/and logos are trademarks (™) or registered trademarks (®) of their respective owners.

Table of Contents

Preface **3**
Signal words and symbols 3
More symbols 3
Laws and guidelines 4
Warranty and liability 4
Support 4
Copyright 4
Table of Contents **5**

1 Basic Safety Instructions 9
1.1 Target group 9
1.2 Transport, storage and proper use 10
1.3 Installation 11
1.4 Electrical connection 12
1.4.1 EMC-compatible installation 13
1.4.2 Voltage test 13
1.4.3 Insulation measurement 13
1.5 Start-up and operation 14
1.6 Maintenance 16
1.7 Repair 16
1.8 Disposal 17

2 Product Description 18
2.1 Specified application 18
2.1.1 Residual risks 18
2.2 Unintended use 18
2.3 Product features 19
2.4 Part code 20
2.5 Nameplate 22
2.5.1 Configurable options 23

3 Technical data 24
3.1 Operating conditions 24
3.1.1 Climatic environmental conditions 24
3.1.2 Mechanical environmental conditions 25
3.1.3 Further environmental operating conditions 25
3.1.4 Electrical operating conditions 25
3.1.4.1 Device classification 25
3.1.4.2 Electromagnetic compatibility 26
3.2 Device data of the 400V devices 27
3.2.1 Overview of the 400V devices 27

3.2.2 Voltage and frequencies for 400V devices 29
3.2.2.1 Example of the calculation of the possible motor voltage: 29
3.2.3 Input and output currents/ overload 30
3.2.3.1 Overload characteristic (OL) 30
3.2.3.2 Frequency-dependent maximum current (OL2) 32
3.2.4 Overview of rectifier data for 400 V devices 38
3.2.5 Power dissipation at rated operation 39
3.2.6 Fusing of the 400 V devices 39
3.2.6.1 Fuse protection for AC supply 39
3.2.6.2 Fuse protection of the 400 V units ati DC-supply 40
3.3 General electrical data 41
3.3.1 Switching frequency and temperature 41
3.3.1.1 Switching frequencies and temperatures for air coolers 41
3.3.1.2 Switching frequencies and temperatures for fluid coolers (water) 42
3.3.2 DC link / braking transistor function 43
3.3.2.1 DC link / braking transistor function 44
3.3.3 Sub-mounted braking resistors 44
3.3.4 Fan 45
3.3.4.1 Switching behaviour of the fans 46
3.3.4.2 Switching points of the fans 46

4 Installation 47

4.1 Dimensions and weights 47
4.1.1 Built-in version air cooler 47
4.1.2 Push-through version air cooler IP20, IP54-ready 48
4.1.3 Built-in version fluid cooler (water) 49
4.1.4 Push-through version fluid cooler (water) IP20, IP54-ready 50
4.1.5 Built-in version Fluid cooler (water) High performance, IP54-ready 51
4.1.6 Built-in version Fluid cooler (water) High performance, IP54-ready 52
4.2 Control cabinet installation 53
4.1.7 Control cabinet installation 53
4.1.8 Devices with transport bracket 53
4.2.1 Mounting instructions 54
4.2.2 Mounting distances 55
4.2.3 Installation of IP54-ready devices 56
4.2.4 Control cabinet ventilation 57
4.2.5 Airflow of the drive controller 57

5 Installation and connection 58

5.1 Overview of the COMBIVERT F6 58
5.2 Connection of the power unit 61
5.2.1 Connection of the voltage supply 61

5.2.1.1 Terminal block X1A for 400 V devices 62
5.2.2 Protective earth and functional earth 63
5.2.2.1 Protective earth 63
5.2.2.2 Functional earthing 63
5.3 Mains connection 64
5.3.1 Supply cable 64
5.3.2 AC mains connection 64
5.3.2.1 AC supply 3-phase 64
5.3.3 DC mains connection 65
5.3.3.1 Terminal block X1A DC connection 65
5.3.3.2 Connection at DC voltage supply 66
5.3.4 Connection of the motor 67
5.3.4.1 Wiring of the motor 67
5.3.4.2 Terminal block X1A motor connection 68
5.3.4.3 Selection of the motor line 69
5.3.4.4 Motor cable length and conducted interferences at AC supply 69
5.3.4.5 Motor cable length for parallel operation of motors 70
5.3.4.6 Motor cable cross-section 70
5.3.4.7 Interconnection of the motor 70
5.3.4.8 Connection of the temperature monitoring and brake control (X1C) 71
5.3.5 Connection and use of a braking resistor 73
5.3.5.1 Terminal block X1A connection braking resistor 74
5.3.5.2 Use of non-intrinsically safe braking resistors 75
5.3.6 DC-bus connection 76
5.3.7 External heat sink fan supply (FAN) 78
5.4 Accessories 80
5.4.1 Filters and chokes 80
5.4.2 Seal for IP54-ready devices 80
5.4.3 Side-mounted braking resistors 80

6 Operation of Liquid-Cooled Devices 81

6.1 Water-cooled devices 81
6.1.1 Heat sink and operating pressure 81
6.1.2 Materials in the cooling circuit 81
6.1.3 Requirements for the coolant 82
6.1.4 Connection of the cooling system 84
6.1.5 Coolant temperature 85
6.1.5.1 Supply of temper coolant 85
6.1.6 Condensation 86
6.1.7 Storage 86
6.1.8 Permissible volume flow with water cooling 86
6.1.9 Volume flow and temperature difference 87

6.1.10 Typical pressure drop of the heat sink 88
6.2 With high-performance heat sink 89
6.2.1 Heat sinks and operating pressure 89
6.2.2 Materials in the cooling circuit 89
6.2.3 Requirements for coolant for high-performance heat sinks 90
6.2.4 Connection of the high-performance heat sink 92
6.2.5 Coolant temperature 93
6.2.5.1 Supply of temper coolant 93
6.2.6 Condensation 94
6.2.7 Storage 94
6.2.8 Permissible volume flow for high-performance heat sinks 94
6.2.9 Volume flow and temperature difference for high-performance heat sink 95
6.2.10 Typical pressure drop of the high-performance heat sink 96

7 Approvals and certifications 97
7.1 CE-Marking 97
7.2 Maritime version 97
7.3 UL certification 98
7.4 Further informations and documentation 100

8 Revision History 101

Glossary 102

List of Figures 104

List of Tables 106

1 Basic Safety Instructions

The products are designed and constructed in accordance with state-of-the-art technology and the recognized safety rules and regulations. However, the use of such devices may cause functional hazards for life and limb of the user or third parties, or damages to the system and other material property.

The following safety instructions have been created by the manufacturer for the area of electric drive technology. They can be supplemented by local, country- or application-specific safety instructions. This list is not exhaustive. Violation of the safety instructions by the customer, user or other third party leads to the loss of all resulting claims against the manufacturer.

NOTICE



Hazards and risks through ignorance!

► Read the instructions for use!

► Observe the safety and warning instructions!

► If anything is unclear, please contact KEB Automation KG!

1.1 Target group

This instruction manual is determined exclusively for electrical personnel. Electrical personnel for the purpose of this instruction manual must have the following qualifications:

- Knowledge and understanding of the safety instructions.
- Skills for installation and assembly.
- Start-up and operation of the product.
- Understanding of the function in the used machine.
- Detection of hazards and risks of the electrical drive technology.
- Knowledge of *VDE 0100*.
- Knowledge of national safety regulations.
-

⚠ DANGER



Interventions by unauthorized personnel!

Danger to life by electric shock and malfunction!

► Modification or repair is only permitted by KEB authorised personnel.

1.2 Transport, storage and proper use

The transport is carried out by qualified persons in accordance with the environmental conditions specified in this manual. Drive controller shall be protected against excessive strains.



Transport of drive controllers with an edge length >75 cm

The transport by forklift without suitable tools can cause a deflection of the heat sink. This leads to premature aging or destruction of internal components.

► Transport of drive controllers on suitable pallets.

► Do not stack drive controllers or burden them with other heavy objects.

NOTICE

Damage to the coolant connections

Bending of the tubes!

► Never place the device on the coolant connections

NOTICE

Behaviour in case of transport damage



► When receiving goods, check the device for transport damage such as deformations or loose parts.

► In case of damage, contact the carrier immediately.

► Do not operate the device in case of transport damage!



Drive controllers contain electrostatic sensitive components.

► Avoid contact.

► Wear ESD-protective clothing.

Do not store drive controllers

- in the environment of aggressive and/or conductive liquids or gases.
- with direct sunlight.
- outside the specified environmental conditions.

1.3 Installation

⚠ DANGER



Do not operate in an explosive environment!

► The product is not intended for the use in potentially explosive environment.

⚠ CAUTION



Design-related edges and high weight!

Contusions and bruises!

► Never stand under suspended loads.

► Wear safety shoes.

► Secure drive controller accordingly when using lifting gear.

To prevent damages to the device:

- Make sure that no components are bent and/or isolation distances are changed.
- The device must not be put into operation in case of mechanical defects.
- Do not allow moisture or mist to penetrate the unit.
- Avoid dust permeating the device. Allow for sufficient heat dissipation if installed in a dust-proof housing.
- Note installation position and minimum distances to surrounding elements. Do not cover the ventilation openings.
- Mount the drive controller according to the specified degree of protection.
- Make sure that no small parts fall into the product during assembly and wiring (drilling chips, screws etc.). This also applies to mechanical components, which can lose small parts during operation.
- Check the reliable fit of the device connections in order to avoid contact resistances and sparking.
- Do not walk-on drive controller.
- Follow all safety instructions!

1.4 Electrical connection

⚠ DANGER

Voltage at the terminals and in the device!

Danger to life due to electric shock !







- ► Never work on the open device or never touch exposed parts.
- ► For any work on the unit switch off the supply voltage, secure it against switching on and check absence of voltage by measuring at the input terminals.
- ► Wait until all drives has been stopped in order that no regenerative energy can be generated.
- ► Wait capacitor discharge time (5 minutes). Check absence of voltage by measuring at the terminal block.
- ► If personal protection is required, install suitable protective devices for drive converters.
- ► Never bridge upstream protective devices (even for testing purposes).
- ► Connect the protective earth conductor always to drive converter and motor.
- ► Install all required covers and protective devices for operation.
- ► The control cabinet shall be kept closed during operation.
- ► Residual current: This product may cause a dc current in the protective earth conductor. When a residual current protective device (RCD) or a residual current monitoring device (RCM) is used for the protection against direct or indirect contact, only a RCD or RCM type B is permitted on the power supply side of this product.
- ► Drive converters with a leakage current > 3.5 mA AC current (10 mA DC current) are intended for a stationary connection. Protective earth conductors must be designed in accordance with the local regulations for equipment with high leakage currents according to *EN 61800-5-1, EN 60204-1* or *VDE 0100*.



If personnel protection is required during installation of the system, suitable protective devices must be used for drive controllers.
www.keb.de/fileadmin/media/Techinfo/dr/tn/ti_dr_tn-rcd-00008_en.pdf

Installations which include drive controller shall be equipped with additional control and protective devices in accordance with the relevant applicable safety requirements, e.g. act respecting technical equipment, accident prevention rules etc. They must always be complied with, also for drive controller bearing a CE marking.

For a trouble-free and safe operation, please pay attention to the following instructions:

- The electrical installation shall be carried out in accordance with the relevant requirements.
- Cable cross-sections and fuses must be dimensioned by the user according to the specified minimum/maximum values for the application.
- Connection of the drive converter is only permissible on symmetrical networks with a maximum line voltage (L1, L2, L3) with respect to earth (N/PE) of max. 300 V.
- With existing or newly wired circuits the person installing the units or machines must ensure that the PELV requirements are met.
- For drive converters that are not isolated from the supply circuit (in accordance with *EN 60721-3-2*) all control lines must be included in other protective measures (e.g. double insulation or shielded, earthed and insulated).
- When using components without isolated inputs/outputs, it is necessary that equipotential bonding exists between the components to be connected (e.g. by the equipotential line). Disregard can cause destruction of the components by equalizing currents.

1.4.1 EMC-compatible installation

Observance of the limit values required by EMC law is the responsibility of the customer.



Notes on EMC-compatible installation can be found here.
www.keb.de/fileadmin/media/Manuals/dr/emv/0000neb0000.pdf

1.4.2 Voltage test

Testing with AC voltage (in accordance with *EN 60204-1* chapter 18.4) may not be executed, since there is danger for the power semiconductors in the drive controller.

Due to the radio interference suppression capacitors, the test generator will switch off immediately with a current fault.

According to *EN 60204-1* it is permissible to disconnect already tested components. Drive controllers of the KEB Automation KG are delivered ex works voltage tested to 100% according to product standard.

1.4.3 Insulation measurement

An insulation measurement (in accordance with *EN 60204-1* chapter 18.3) with DC 500 V is permissible, if all power unit connections (grid-connected potential) and all control connections are bridged with PE. The insulation resistance of the respective device can be found in the technical data.

1.5 Start-up and operation

Commissioning (i.e. placing the product into its intended service) is only permitted when all legal requirements applicable to the product and its intended use, as well as all applicable safety and health protection requirements, have been met. If the product is integrated into a higher-level machine or system, the requirements applicable to such integration must also be observed. The requirements of EN 60204-1 must be observed.

⚠ WARNING

Software protection and programming!

Hazards caused by unintentional behavior of the drive!



- ► Check especially during initial start-up or replacement of the drive controller if the parameterization is compatible to application.
- ► Securing a unit solely with software-supported functions is not sufficient. It is imperative to install external protective measures (e.g. limit switch) that are independent of the drive controller.
- ► Secure motors against automatic restart.

⚠ CAUTION

High temperatures at heat sink and coolant!

Burning of the skin!



- ► Cover hot surfaces safe-to-touch.
- ► If necessary, attach warning signs on the system.
- ► Before touching, check the surface and coolant lines.
- ► Before working let the unit cool down.

- During operation, all covers and doors shall be kept closed.
- Use only approved accessories for this device.
- Never touch terminals, busbars or cable ends.

⚠ WARNING

Triggering of overcurrent protection devices

Risk of fire or electric shock!



- ► Triggering of an overcurrent protection device will be a hint for an overload or short circuit. Triggering a RCD may be caused by a leakage current.
- ► In order to reduce the risk of fire or electric shock, live parts and other components of the controller should be checked and replaced in case of damage.
- ► If the contacts of an overload relay are burned, the complete relay must be replaced.

⚠ CAUTION



High sound level during operation!

Hearing damage possible!

► Wear hearing protection!

NOTICE

Continuous operation (S1) with load > 60 % or from a rated motor power of 55 kW!

Premature ageing of the electrolytic capacitors!

► Mains choke with U_k = 4% absolutely necessary.



If a drive controller with electrolytic capacitors in a DC link has not been in operation for more than one year, observe the following instructions.

www.keb.de/fileadmin/media/Techinfo/dr/tn/ti_dr_tn-format-capacitors-00009_en.pdf

Switching at the output

Switching between motor and drive controller is prohibited for single drives during operation as this may trigger the protection gear of the device. Function ‚speed search' must be activated if switching can not be avoided. Speed search may only be triggered after closing the motor contactor (e.g. by switching the control release).

Connecting and disconnecting is permissible with multiple motor drives if at least 1 motor is running during the switch-over process. The drive controller must be dimensioned to the occurring starting currents.

The ‚speed search' function must be activated if the motor is still running during a restart of the drive controller (mains on) (e.g. due to large rotating masses).

Switching at the input

For applications that require cyclic switching off and on of the drive controller, maintain an off-time of at least 5 min after the last switch on. If you require shorter cycle times please contact KEB Automation KG.

Short-circuit resistance

The drive converters are conditional short-circuit proof. After resetting the internal protection devices, the function as directed is guaranteed.

Exceptions:

- If an earth-leakage fault or short-circuit often occurs at the output, this can lead to a defect in the unit.
- If a short-circuit occurs during regenerative operation (2nd or 4th quadrant, regeneration into the DC link), this can lead to a defect in the unit.

1.6 Maintenance

The following maintenance work has to be carried out when required, but at least once per year by authorized and trained personnel. Check unit for loose screws and plugs and tighten if necessary.

- ► Check system for loose screws and plugs and tighten if necessary.
- ► Clean drive controller from dirt and dust deposits. Pay attention especially to cooling fins and protective grid of the fans.
- ► Examine and clean extracted air filter and cooling air filter of the control cabinet.
- ► Check the function of the fans of the drive controller. The fan must be replaced in case of audible vibrations or squeak.
- ► In the case of liquid-cooled drive controllers a visual test of the cooling circuit for leaks and corrosion must be carried out.The cooling circuit must be completely empty if a unit shall be switched off for a longer period. The cooling circuit must be blown out additionally with compressed air at temperatures below 0°C.

1.7 Repair

In case of malfunction, unusual noises or smells inform a person in charge!

⚠ DANGER

Unauthorized exchange, repair and modifications!

Unpredictable malfunctions!



- ► The function of the drive controller is dependent on its parameterization. Never replace without knowledge of the application.
- ► Modification or repair is permitted only by KEB Automation KG authorized personnel.
- ► Only use original manufacturer parts.
- ► Infringement will annul the liability for resulting consequences.

In case of failure, please contact the machine manufacturer. Only the machine manufacturer knows the parameterisation of the used drive controller and can provide an appropriate replacement or induce the maintenance.

1.8 Disposal

Electronic devices of the KEB Automation KG are exclusively professional devices for further industrial processing (so-called B2B devices).

Manufacturers of B2B devices are obliged to take back and recycle devices manufactured after 14.08.2018. These devices may not be disposed at the collection centres of public sector disposal organisations.

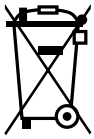

If no deviating agreement has been made between the customer and KEB or no deviating mandatory legal regulation exists, KEB products marked in this way can be returned. Company and keyword to the return point can be taken from the list below. Shipping costs are paid by the customer. Thereupon the devices will be professionally recycled and disposed.

The entry numbers are listed country-specific in the following table. The corresponding KEB return addresses can be found on our website.

Withdrawal by	WEEE-Reg.-No.		Keyword
Austria			
KEB Automation GmbH	ERA:	51976	Stichwort „Rücknahme WEEE“
France			
RÉCYLUM - Recycle point	ADEME:	FR021806	Mots clés „KEB DEEE“
Germany			
KEB Automation KG	EAR:	DE12653519	Stichwort „Rücknahme WEEE“
Italy			
COBAT	AEE: (IT)	19030000011216	Parola chiave „Ritiro RAEE“
Spain			
KEB Automation KG	RII-AEE	7427	Palabra clave „Retirada RAEE“
Česko			
KEB Automation KG	RETELA	09281/20 ECZ	Klíčové slovo: Zpětný odběr OEEZ
Slowakei			
KEB Automation KG	ASEKOL:	RV22EEZ0000421	Klíčové slovo: ”Spätný odber OEEZ”

The packaging must be feed to paper and cardboard recycling.

2 Product Description

The device series COMBIVERT F6 concerns to drive controllers, which are optimized for operation at synchronous and asynchronous motors.

The COMBIVERT can be extended with a safety module for the use in safety-oriented applications. The COMBIVERT F6 series are drive controllers with functional safety, optimized for operation at synchronous and asynchronous motors.

Various safety functions are available for different applications. It can be operated with a fieldbus module at different fieldbus systems. The control board has a system comprehensive operating concept.

The COMBIVERT complies with the requirements of the Machinery Directive. The possible functions are certified via a type test.

The COMBIVERT is a product of limited availability in accordance with *EN 61800-3*. This product may cause radio interference in residential areas. In this case the operator may need to take corresponding measures.

The Machinery Directive, EMC Directive, Low Voltage Directive and other directives and regulations must be observed

2.1 Specified application

The COMBIVERT serves exclusively for the control and regulation of three-phase motors. It is intended for the installation into electrical systems or machines in the industrie.

Technical data and information for connection conditions shall be taken from the nameplate and from the instructions for use and must be strictly observed.

The used semiconductors and components of the KEB Automation KG are developed and dimensioned for the use in industrial products.

Restriction

If the product is used in machines, which work under exceptional conditions or if essential functions, life-supporting measures or an extraordinary safety step must be fulfilled, the necessary reliability and security must be ensured by the machine builder.

2.1.1 Residual risks

Despite intended use, the drive controller can reach unexpected operating conditions in case of error, with wrong parameterization, by faulty connection or unprofessional interventions and repairs. This can be:

- wrong direction of rotation
- motor speed too high
- motor is running into limitation
- motor can be under voltage even in standstill
- automatic start

2.2 Unintended use

The operation of other electric consumers is prohibited and can lead to the destruction of the devices. The operation of our products outside the indicated limit values of the technical data leads to the loss of any liability claims.

2.3 Product features

These instructions for use describe the power units of the following devices:

Device type:	Drive controller
Series:	COMBIVERT F6
Power range:	110...200 kW / 400 V
Housing:	7

The COMBIVERT F6 is characterized by the following features:

- Operation of three-phase asynchronous motors and three-phase synchronous motors, in operating modes open-loop or closed-loop with and without speed feedback
- Following fieldbus systems are supported:
  EtherCAT, VARAN, PROFINET, POWERLINK or CAN
- System-overlapping operating concept
- Wide operating temperature range
- Low switching losses by IGBT power unit
- Low noise development due to high switching frequencies
- Different heat sink concepts
- Temperature-controlled fan, easily replaceable
- Torque limits and s-curves are adjustable to protect gearboxes
- General protection functions of the COMBIVERT series against overcurrent, overvoltage, ground fault and overtemperature
- Analog inputs and outputs, digital inputs and outputs, relay output (potential-free), brake control and -supply, motor protection by I^2t, KTY- or PTC input, two encoder interfaces, diagnostic interface, fieldbus interface (depending on the control board)
- Integrated safety function according to *EN 61800-5-2*

2.4 Part code

x x F 6 x x x - x x x x

Heat sink version	1:	Air-cooler, mounted version
	2:	Liquid cooler (water), mounted version
	3:	Air-cooler, through-mount version IP54-ready
	4:	Liquid cooler (water), through-mount version IP54-ready
	5:	Air-cooler, through-mount version IP20
	6:	Liquid cooler (water), trough-mount version IP54-ready, sub-mounted braking resistors
	7:	Liquid cooler (oil), through-mount version IP54-ready
	8:	Liquid cooler (oil), through-mount version IP54-ready, sub-mounted braking resistors
	9:	Liquid cooler (water), mounted version, sub-mounted braking resistors
	A:	Liquid cooler (water), mounted version, High Performance, sub-mounted braking resistors
	B:	Liquid cooler (water), through-mount version, IP54-ready, High Performance, sub-mounted braking resistors
	C:	Air-cooler, mounted version, Version 2
	D:	Air-cooler, mounted version, High-Performance
	E:	Liquid cooler (water), mounted version, High-Performance
	F:	Air-cooler, through-mount version IP54-ready, High-Performance
	G:	Liquid cooler (water), trough-mount version IP54-ready, High-Performance
	H:	Air-cooler,, Convektion, trough-mount version IP54-ready
Control board variant		**APPLIKATION**
	1:	Multi Encoder Interface, CAN® [2], Real-Time Ethernet-busmodule [3]
	B	Multi Encoder Interface, CAN® [2], Real-Time Ethernet-busmodule [3], Alternative connector
		KOMPAKT
	1:	Multi Encoder Interface, CAN® [2], STO, EtherCAT® [1]
	2:	Multi Encoder Interface, CAN® [2], STO, VARAN
		PRO
	0:	No Encoder, CAN® [2], Real-Time Ethernetinterface [3], standard relays
	1:	Multi Encoder Interface, CAN® [2], Real-Time Ethernet interface [3], standard relays
	2:	Hiperface DSL [4] OCT, CAN® [2] Ethernet-Feldbus-Interface, standard relays
	3:	Multi Encoder Interface, CAN® [2], Real-Time Ethernet interface [3], RS485-potential free, standard relays
	4:	No Encoder, CAN® [2], Real-Time Ethernetinterface [3], safe relay
	5:	Multi Encoder Interface, CAN® [2], Real-Time Ethernet interface [3], safe relay
	B:	Multi Encoder Interface, CAN® [2], Real-Time Ethernet interface [3], alternative connector

continued on the next page

x x F 6 x x x - x x x x

Switching frequency, Software current limit, Turn-off current	0: 2 kHz / 125% / 150%	8: 2 kHz / 180% / 216%
	1: 4 kHz / 125% / 150%	9: 4 kHz / 180% / 216%
	2: 8 kHz / 125% / 150%	A: 8 kHz / 180% / 216%
	3: 16 kHz / 125% / 150%	B: 8 kHz / HSD
	4: 2 kHz / 150% / 180%	C: 6 kHz / HSD
	5: 4 kHz / 150% / 180%	D: Non standard switching frequency / Overload characteristic
	6: 8 kHz / 150% / 180%	E: Special Device
	7: 16 kHz / 150% / 180%	
Voltage / Connection type	1: 3ph 230 V AC/DC with braking transistor	
	2: 3ph 230 V AC/DC without braking transistor	
	3: 3ph 400 V AC/DC with braking transistor	
	4: 3ph 400 V AC/DC without braking transistor	
	A: 3ph 400 V AC/DC incl. GTR7 / max. rectifier / max. pre-charging	
	B: 3ph 400 V AC/DC without GTR7 / max. rectifier / max. pre-charging	
	C: 3ph 400 V AC/DC. GTR7-variant 2	
	D: 3ph 400 V AC/DC GTR7-variant 2 / max. rectifier / max. pre-charging	
Housing	2…9	
Equipment	1: Safety module type 1 / STO at control type K	
	3: Safety module type 3	
	4: Safety module type 4	
	5: Safety module type 5	
Control type	A: APPLICATION	
	K: COMPACT	
	P: PRO	
Series	COMBIVERT F6	
Inverter size	10…33	

Table 1: Part code

1) *EtherCAT® is a registered trademark and patented technology, licensed by Beckhoff Automation GmbH, Germany.*

2) *CANopen® is a registered trademark of CAN in AUTOMATION - International Users and Manufacturers Group e.V.*

3) *The Real-Time Ethernetbusmodul / Real-Time Ethernet interface contains various fieldbus control types which can be adjusted by software (parameter fb68).*

4) *DSL® stands for Digital Servo Link. It is a digital, serial interface protocol between drive controllers and motor encoders.*

The part code may not be used as order code, but only for identification!

2.5 Nameplate

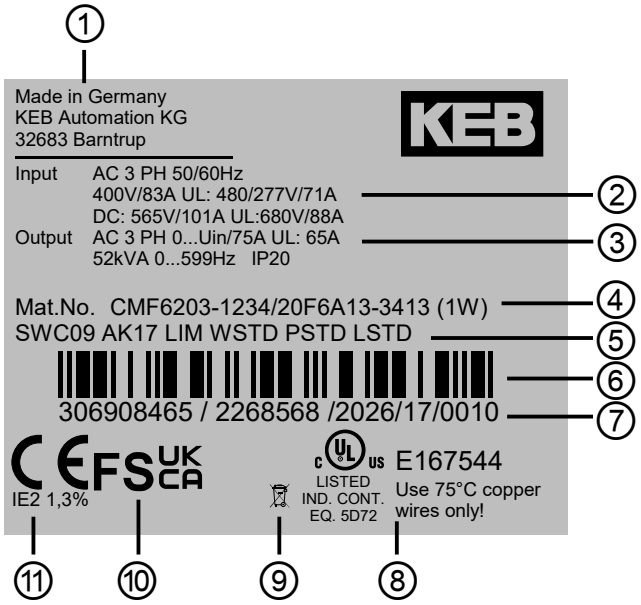

Legend	
1	Manufacturer identification
2	Technical data input
3	Technical data output
4	Material number, basic device, KEB internal version number => *„2.4 Part code“*
5	Configurable options or customer material number/version => *„2.5.1 Configurable options“*
6	Barcode Interleaved 2/5 (serial number)
7	Serial-, order number; Year and week of production; Factory
8	UL certification
9	Disposal information
10	Certifications
11	International Efficiency

Figure 1: Nameplate (exemplary)

2.5.1 Configurable options

Features	Feature values	Description
Software	*SWxxx* [1]	Software status of the drive controller
Accessories	*Axxx* [1]	Selected accessories
	NAK	No accessories
Output frequency activation	LIM	Limitation to 599 Hz
	ULO	> 599 Hz activated
Warranty	WSTD	Warranty - Standard
	Wxxx [1]	Warranty extension
Parameterization	PSTD	Parameterization - Standard
	Pxxx [1]	Parameterization - Customer-specific
Nameplate logo	LSTD	Logo - Standard
	Lxxx [1]	Logo - Customer-specific

Figure 2: Configurable options

[1] „*x*“ indicates a variable value

3 Technical data

Unless otherwise indicated, all electrical data in the following chapter refer to a 3-phase AC mains.

3.1 Operating conditions

3.1.1 Climatic environmental conditions

Storage		**Standard**	**Class**	**Descriptions**
Ambient temperature		*EN 60721-3-1*	1K4	-25…55 °C
Relative humidity		*EN 60721-3-1*	1K3	5…95 % (without condensation)
Storage height		–	–	Max. 3000 m above sea level
Transport		**Standard**	**Class**	**Descriptions**
Ambient temperature		*EN 60721-3-2*	2K3	-25…70 °C
Relative humidity		*EN 60721-3-2*	2K3	95 % at 40 °C (without condensation)
Operation		**Standard**	**Class**	**Descriptions**
Ambient temperature		*EN 60721-3-3*	3K3	5…40 °C (extended to -10…45 °C) [1]
Coolant inlet temperature	Air	–	–	5…40 °C (extended to -10…45 °C)
	Water [2]	–	–	5…40 °C
		–	–	5…55°C(high-performance cooler)
Relative humidity		*EN 60721-3-3*	3K3	5…85 % (without condensation)
Version and degree of protection		*EN 60529*	IP20	Protection against foreign material > ø12.5 mm No protection against water Non-conductive pollution, occasional condensation when PDS is out of service. Drive controller generally, except power connections and fan unit (IPxxA)
Site altitude		–	–	Max. 2000 m above sea level • With site altitudes over 1000 m a derating of 1 % per 100 m must be taken into consideration. • With site altitudes over 2000 m, the control board to the mains has only basic isolation. Additional measures must be taken when wiring the control.

Table 2: Climatic environmental conditions

[1] *Available in a maritime version with derating for +5 to +55°C -> „7.2 Maritime version“.*

[2] *Observe instructions regarding coolant -> „6.1.3 Requirements for the coolant“.*

3.1.2 Mechanical environmental conditions

Storage	Standard	Class	Descriptions
Vibration limits	*EN 60721-3-1*	1M2	Vibration amplitude 1.5 mm (2…9 Hz) Acceleration amplitude 5 m/s² (9…200 Hz)
Shock limit values	*EN 60721-3-1*	1M2	40 m/s²; 22 ms
Transport	**Standard**	**Class**	**Descriptions**
Vibration limits	*EN 60721-3-2*	2M1	Vibration amplitude 3.5 mm (2…9 Hz) Acceleration amplitude 10 m/s² (9…200 Hz)
Shock limit values	*EN 60721-3-2*	2M1	100 m/s²; 11 ms
Operation	**Standard**	**Class**	**Descriptions**
Vibration limits	*EN 60721-3-3*	3M4	Vibration amplitude 3.0 mm (2…9 Hz) Acceleration amplitude 10 m/s² (9…200 Hz)
	EN 61800-5-1	–	Vibration amplitude 0.075 mm (10…58 Hz) Acceleration amplitude 10 m/s² (58…150 Hz)
Shock limit values	*EN 60721-3-3*	3M4	100 m/s²; 11 ms
Pressure in the water cooler	–	–	Rated operating pressure: 10 bar Max. operating pressure: 10 bar

Table 3: Mechanical environmental conditions

3.1.3 Further environmental operating conditions

Operation	Standard	Class	Descriptions
Chemically active substances	*EN 60721-3-3*	3C2	No salt spray
Mechanically active substances		3S2	–
Organic		3B1	–
UV resistance	*EN 61800-5-1*	–	No requirement

Table 4: Further environmental operating conditions

3.1.4 Electrical operating conditions

3.1.4.1 Device classification

Requirement	Standard	Class	Descriptions
Overvoltage category	*EN 61800-5-1*	III	–
Pollution degree	*EN 61800-5-1*	2	Non-conductive pollution, occasional condensation when PDS is out of service.

Table 5: Device classification

3.1.4.2 Electromagnetic compatibility

For devices without an internal filter, an external filter is required to comply with the following limits.

EMC emitted interference	Standard	Class	Descriptions
Conducted interference emission	*EN 61800-3*	C3	From KEB internal version number: 5K The specified class is only maintained in conjunction with a mains choke (without HF filter).
		C2 / C3	The specified class is only maintained in conjunction with a mains choke and an RF filter. Information on interference suppression (rated switching frequency, max. motor line) can be found in the corresponding filter instructions.
Radiated emitted interference	*EN 61800-3*	C2	–
EMF	*EN 61800-5-1*	–	Table P.2
Immunity	**Standard**	**Level**	**Descriptions**
Static discharges	*EN 61000-4-2*	8 kV 4 kV	AD (air discharge) CD (contact discharge)
Burst - Ports for process measurement control lines and signal interfaces	*EN 61000-4-4*	2 kV	–
Burst - AC - power ports	*EN 61000-4-4*	4 kV	–
Surge - Power ports	*EN 61000-4-5*	1 kV 2 kV	Phase-phase Phase-ground
Conducted immunity, induced by high-frequency fields	*EN 61000-4-6*	10 V	0.15...80 MHz
Electromagnetic fields	*EN 61000-4-3*	10 V/m 3 V/m 1 V/m	80 MHz...1 GHz 1.4...2 GHz 2...2.7 GHz
voltage dips	*EN 61000-4-11* *EN 61000-4-34*	Class 3	–
frequency fluctuations	*EN 61000-4-28*	± 2 %	–
Voltage unbalances	*EN 61000-2-4*	≤ 3 %	–

Table 6: Electromagnetic compatibility

3.2 Device data of the 400V devices

3.2.1 Overview of the 400V devices

The technical data are for 2/4-pole standard motors. With other pole numbers the drive controller must be dimensioned onto the rated motor current. Contact KEB for special or medium frequency motors.

Device size			**25**	**25** [8]	**26**	**27**	**28** [10]	**28** [8]	**28**
Housing						**7**			
Rated apparent output power		S_{out} / kVA	145	145	173	208	256	256	256
Max. rated motor power	[1]	P_{mot} / kW	110	110	132	160	200	200	200
Rated input voltage		U_N / V	400 (UL: 480)						
Input voltage range		U_{in} / V	280...550						
Mains phases			3						
Mains frequency		f_N / Hz	50 / 60 ±2						
Rated input current @ U_N = 400V		I_{in} / A	221	221	263	315	390	390	390
Rated input current @ U_N = 480V		I_{in_UL} / A	186	186	217	269	337	337	337
Insulation resistance @ U_{dc} = 500V		R_{iso} / MΩ	> 15						
Output voltage		U_{out} / V	0...U_{in}						
Output frequency	[2]	f_{out} / Hz	0...599						
Output phases			3						
Rated output current @ U_N = 400V		I_N / A	210	210	250	300	370	370	370
Rated output current @ U_N = 480V		I_{N_UL} / A	180	180	210	260	325	325	325
Rated output overload (60 s)	[3] [4]	I_{60s} / %	125						
Software current limit	[3]	I_{lim} / %	125						
Overcurrent	[3]	I_{OC} / %	150						
Rated switching frequency		f_{SN} / kHz	4	4	4	2	2	2	2
Max. switching frequency	[5]	f_{S_max} / kHz	16						
Power dissipation at rated operation	[1]	P_D / kW	2,2	2,1	2,7	2,7	3,556	3,556	3,8

continued on the next page

Device size			25	25 [8]	26	27	28 [10]	28 [8]	28
Housing			7						
Overload current over time	[3]	I_{OL} / %	*„3.2.3.1 Overload characteristic (OL)“*						
Maximum current 0Hz/50Hz at f_S=2kHz		I_{out_max} / %	133/150	135/150	100/150	90/150	50/125	100/150	84/150
Maximum current 0Hz/50Hz at f_S=4kHz		I_{out_max} / %	100/150	100/150	70/150	58/107	25/64	58/150	54/108
Maximum current 0Hz/50Hz at f_S=8kHz		I_{out_max} / %	55/124	55/125	28/71	24/61	10/35	34/61	30/66
Maximum current 0Hz/50Hz at f_S=16kHz		I_{out_max} / %	21/57	25/60	14/36	12/31	3/18	17/31	9/26
Max. braking current		I_{B_max} / A	382						
Min. braking resistor value		R_{B_min} / Ω	2,2						
Braking transistor	[6]		Max. cycle time: 120s; Max c.d.f.: 50%						
Protective function for braking transistor			Short-circuit monitoring						
Protective function braking resistor (Error GTR7 always on)	[7]		Feedback signal evaluation and current switch-off (only for AC mains connection)						
Max. motor cable length shielded	[9]	l / m	50						

Table 7: Overview of the 400 V device data

[1] *Rated operation corresponds to U_N = 400V, rated switching frequency, output frequency = 50 Hz (4-pole standard asynchronous motor).*

[2] *The output frequency must be limited so that it does not exceed 1/10 of the switching frequency. Notice! Devices with a maximum output frequency higher than 599 Hz are subject to export restrictions.*

[3] *The values refer in % to the rated output current I_N.*

[4] *Please note restrictions => „3.2.3.1 Overload characteristic (OL)“.*

[5] *A detailed description of the Derating => „3.3.1 Switching frequency and temperature“.*

[6] *The cyclic duration factor is additionally limited by the used braking resistor.*

[7] *The feedback signal evaluation monitors the functionality of the braking transistor. Power off occurs via the internal mains input bridge of the AC supply. There is no current switch-off with DC power supply.*

[8] *Only available as fluid cooler (water)*

[9] *The maximum cable length depends on various factors. Further information can be found in the corresponding filter instructions.*

[10] *For size 28 drive controller with E (special device) on the 9th. Position in the type code.*

3.2.2 Voltage and frequencies for 400V devices

Input voltages and frequencies		
Rated input voltage	U_N / V	400
Rated mains voltage (USA)	U_{N_UL} / V	480
Input voltage range	U_{IN} / V	280...550
Input phases		3
Mains frequency	f_N / Hz	50/60
Mains frequency tolerance	$\pm f_N$ / Hz	2

Table 8: Input voltages and frequencies of the 400V devices

DC link voltage		
DC link rated voltage @ U_N = 400V	U_{N_dc} / V	565
DC link rated voltage @ U_{N_UL} = 480V	$U_{N_UL_dc}$ / V	680
DC link voltage working voltage range	U_{IN_dc} / V	390...780

Table 9: DC link voltage for 400V devices

Output voltages and frequencies			
Output voltage at AC supply	1)	U_{out} / V	0…U_{N_ac}
Output frequency	2)	f_{out} / Hz	0…599
Output phase			3

Table 10: Output voltages and frequencies of the 400V devices

1) *The voltage to the motor is dependent on the actual input voltage and the control method => („Example of the calculation of the possible motor voltage:“).*

2) *The output frequency is to be limited in such a way that it does not exceed 1/10 of the switching frequency. Devices with a maximum output frequency higher than 599Hz are restricted for export.*

3.2.2.1 Example of the calculation of the possible motor voltage:

The motor voltage for dimensioning of the drive is depending on the used components. The motor voltage reduces according to the following table:

Component	Reduction / %	Example
Mains choke U_k	4	*Open-loop drive controller with mains- and motor choke at non-rigid supply system:* *400 V mains voltage (100%) - 36 V reduced voltage (11 %) = 356 V motor voltage*
Drive controller open-loop	4	
Drive controller closed-loop	8	
Motor choke U_k	1	
Non-rigid supply system	2	

Table 11: Example of the calculation of the possible motor voltage:

3.2.3 Input and output currents/ overload

Device size			25	26	27	28
Rated input current @ U_N = 400V	1)	I_{in} / A	221	263	315	390
Rated input current @ U_{N_UL} = 480V	1)	I_{in_UL} / A	186	217	269	337
Rated input current DC @ U_{N_dc}= 565 V		I_{in_dc} / A	266	317	380	469
Rated input current DC @ $U_{N_UL_dc}$ = 680 V		$I_{in_UL_dc}$ / A	228	266	330	412
Rated output current @ U_N = 400V		I_N / A	210	250	300	370
Rated output current @ U_{N_UL} = 480V		I_{N_UL} / A	180	210	260	325
Rated output overload (60 s)	2)	I_{60s} / %	125	125	125	125
Overload current	2)	I_{OL} / %	*„3.2.3.1 Overload characteristic (OL)“*			
Software current limit	2) 3)	I_{lim} / %	125	125	125	125
Overcurrent	2)	I_{OC} / %	150	150	150	150

Table 12: Input and output currents / overload of the 400 V devices

1) *The values resulting from rated operation with B6 rectifier circuit and mains choke 4% U_k.*

2) *The values refer in % to the rated output current I_N.*

3) *Limitation of the current setpoints in closed-loop operation. This setpint limit is not active in v/f operation.*

3.2.3.1 Overload characteristic (OL)

All drive converters can be operated at rated switching frequency with an utilization of 125 % for 60s.

The OL overload function is a root mean square (RMS) function.

The greater the difference between the overload and underload phases, the greater the deviation of the RMS from the arithmetic mean value.

For extreme overloads (=> *„Figure 3: Switch-off time t depending on overload I/IN (OL)“* or) the load is weighted more heavily. This means the load is provided with a factor for the calculation of the RMS value, by way that the overload protection function triggers, even if the RMS value does not reach 100%.

Restrictions:

- The thermal design of the heat sink is based on the rated operation. The following values are taken into account: Rated output current, ambient temperature, rated switching frequency, rated voltage.
- At high surrounding temperatures and/or high heat sink temperatures (for example, by preceding utilization nearby 100%) the drive converter can change to overtemperature error before triggering the protective function OL.
- At low output frequencies or switching frequencies higher than the rated switching frequency, the frequency-dependent maximum current can be exceeded and error OL2 can be triggered
  => *„3.2.3.2 Frequency-dependent maximum current (OL2)“*.

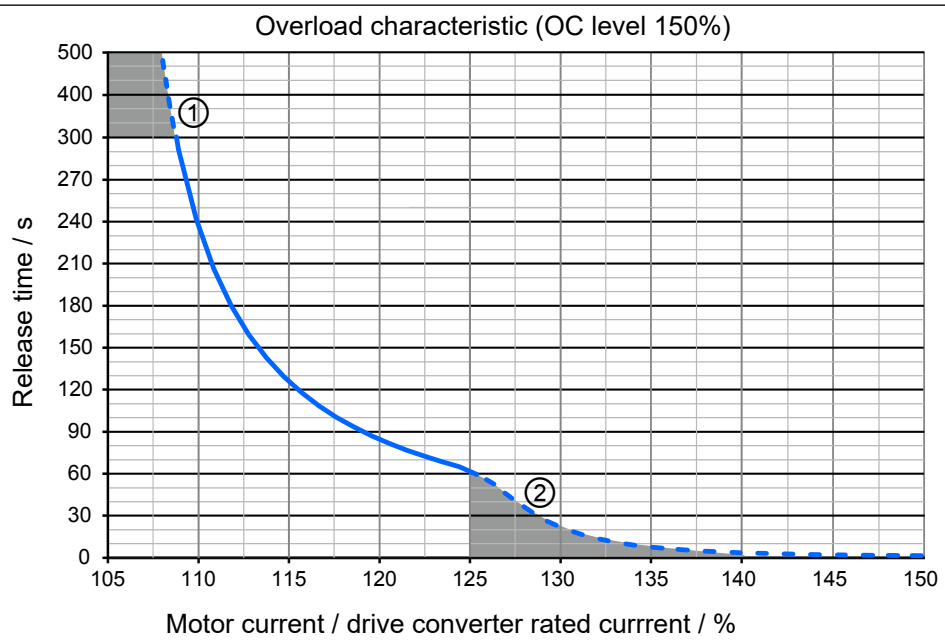

Legend	
1	Thermal overload limit
2	Range for extreme overloads

Figure 3: Switch-off time t depending on overload I/IN (OL)

- On exceeding a load of 105 % the overload integrator starts.
- When falling below the integrator counts backwards.
- If the integrator reaches the overload characteristic „Error! overload (OL)“ is triggered.

After a cooling down period, the integrator can be reset now. The drive converter must remain switched on during the cooling down phase.

Operation in the range of the thermal overload limit

Due to the high slope of the overload characteristic, the duration of a permissible overload in range ① cannot be determined exactly. Therefore, the design of the drive converter should be assumed to have a maximum overload time of 300s.

3.2.3.2 Frequency-dependent maximum current (OL2)

The characteristics of the maximum currents for a switching frequency which are depending on the output frequency are different for each drive controller, but the following rule is genereally applicable to housing 7.

- Lower maximum currents apply for switching frequencies > rated switching frequency.

If error (OL2) shall be triggered on exceeding the maximum currents or if the switching frequency is automatically reduced (derating) can be adjusted in the drive converter parameters.

The following characteristic curve indicates the permissible maximum current for the output frequency values 0 Hz, 1,5 Hz, 3 Hz, 6 Hz, 10 Hz and 25 Hz. Device size 28 is represented exemplary.

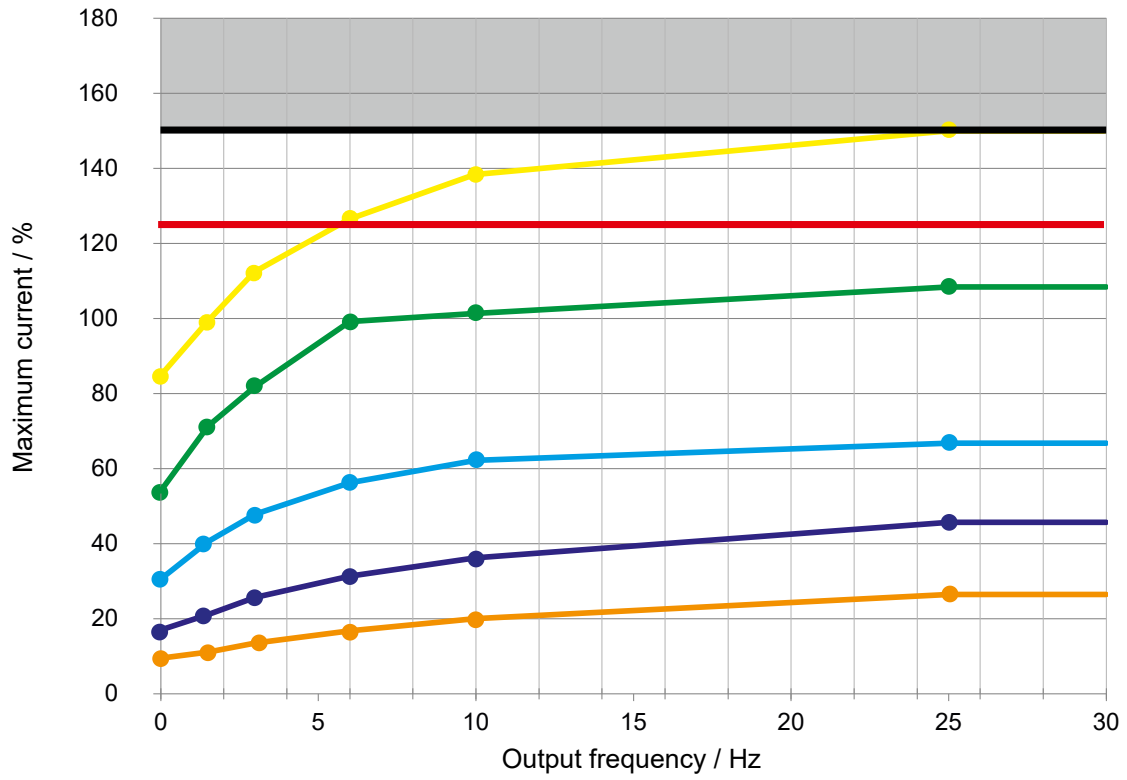

Legend	
	Overcurrent I_{OC}
	Software current limit I_{lim} (the limit can be set with parameter is35)
	Switching frequency 2 kHz
	Switching frequency 4 kHz
	Switching frequency 8 kHz
	Switching frequency 12 kHz
	Switching frequency 16 kHz
	Not available for modulation. Error OC is triggered at 150% overload.

Figure 4: Typical overload characteristic in the lower output frequencies (OL2) Example: 28 cm device

The frequency-dependent maximum current I_{out_max} refers in % to the rated output current I_N.

The current remains constant from the last specified output frequency value.

The values for the respective device size are listed in the following tables.

Frequency-dependent maximum current

Device size			**25**					
Rated switching frequency			**4 kHz**					
Output frequency		**f_{out} / Hz**	**0**	**1,5**	**3**	**6**	**10**	**25**
Frequency-dependent maximum current @ *fs* *Basic Time Period = 62.5 µs (Parameter is22=0)*	I_{out_max} / %	2 kHz	133	150	150	150	150	150
		4 kHz	100	118	136	150	150	150
		8 kHz	55	66	77	91	102	124
		16 kHz	21	26	32	38	44	57
Frequency-dependent maximum current @ *fs* *Basic Time Period = 71.4 µs (Parameter is22=1)*	I_{out_max} / %	1.75 kHz	133	150	150	150	150	150
		3.5 kHz	108	126	139	150	150	150
		7 kHz	66	79	91	105	114	130
		14 kHz	28	35	42	50	57	71
Frequency-dependent maximum current @ *fs* *Basic Time Period = 83.3 µs (Parameter is22=2)*	I_{out_max} / %	1.5 kHz	133	150	150	150	150	150
		3 kHz	117	134	143	150	150	150
		6 kHz	77	92	106	120	126	137
		12 kHz	36	43	51	61	69	86
Frequency-dependent maximum current @ *fs* *Basic Time Period = 100 µs (Parameter is22=3)*	I_{out_max} / %	1.25 kHz	133	150	150	150	150	150
		2.5 kHz	125	142	146	150	150	150
		5 kHz	89	105	121	135	138	144
		10 kHz	45	54	64	76	86	105

Table 13: Frequency-dependent maximum current for device size 25

Device size		**25** [1]					
Rated switching frequency		**4 kHz**					
Output frequency	**f_{out} / Hz**	**0**	**1,5**	**3**	**6**	**10**	**25**
Frequency-dependent maximum current @ *fs* I_{out_max} / % *Basic Time Period = 62.5 µs (Parameter is22=0)*	2 kHz	135	150	150	150	150	150
	4 kHz	100	118	135	150	150	150
	8 kHz	55	65	76	90	102	125
	16 kHz	25	26	31	38	44	60
Frequency-dependent maximum current @ *fs* I_{out_max} / % *Basic Time Period = 71.4 µs (Parameter is22=1)*	1.75 kHz	135	150	150	150	150	150
	3.5 kHz	108	126	139	150	150	150
	7 kHz	66	78	91	105	114	131
	14 kHz	30	34	41	49	56	75
Frequency-dependent maximum current @ *fs* I_{out_max} / % *Basic Time Period = 83.3 µs (Parameter is22=2)*	1.5 kHz	135	150	150	150	150	150
	3 kHz	117	134	142	150	150	150
	6 kHz	77	91	106	120	126	137
	12 kHz	35	42	51	61	69	90
Frequency-dependent maximum current @ *fs* I_{out_max} / % *Basic Time Period = 100 µs (Parameter is22=3)*	1.25 kHz	135	150	150	150	150	150
	2.5 kHz	126	142	146	150	150	150
	5 kHz	88	105	120	135	138	143
	10 kHz	45	54	63	75	85	107

Table 14: Frequency-dependent maximum current for device size 25

[1] *Only available as fluid cooler (water)*

Device size			26					
Rated switching frequency			4 kHz					
Output frequency		f_{out} / Hz	0	1,5	3	6	10	25
Frequency-dependent maximum current @ *fs* *Basic Time Period = 62.5 µs (Parameter is22=0)*	I_{out_max} / %	2 kHz	100	133	150	150	150	150
		4 kHz	70	78	90	112	129	150
		8 kHz	28	44	50	58	64	71
		16 kHz	14	22	26	30	32	36
Frequency-dependent maximum current @ *fs* *Basic Time Period = 71.4 µs (Parameter is22=1)*	I_{out_max} / %	1.75 kHz	100	133	150	150	150	150
		3.5 kHz	78	92	107	131	149	150
		7 kHz	39	52	60	72	80	99
		14 kHz	17	26	30	35	37	42
Frequency-dependent maximum current @ *fs* *Basic Time Period = 83.3 µs (Parameter is22=2)*	I_{out_max} / %	1.5 kHz	100	133	150	150	150	150
		3 kHz	85	105	125	150	150	150
		6 kHz	49	61	70	85	96	127
		12 kHz	19	30	34	40	43	48
Frequency-dependent maximum current @ *fs* *Basic Time Period = 100 µs (Parameter is22=3)*	I_{out_max} / %	1.25 kHz	100	133	150	150	150	150
		2.5 kHz	93	119	143	150	150	150
		5 kHz	60	69	80	99	113	150
		10 kHz	24	37	42	49	53	59

Table 15: Frequency-dependent maximum current for device size 26

Device size			27					
Rated switching frequency			2 kHz					
Output frequency		f_{out} / Hz	0	1,5	3	6	10	25
Frequency-dependent maximum current @ *fs* *Basic Time Period = 62.5 µs (Parameter is22=0)*	I_{out_max} / %	2 kHz	90	108	129	150	150	150
		4 kHz	58	67	77	89	97	107
		8 kHz	24	38	44	50	55	61
		16 kHz	12	19	22	26	28	31
Frequency-dependent maximum current @ *fs* *Basic Time Period = 71.4 µs (Parameter is22=1)*	I_{out_max} / %	1.75 kHz	90	108	129	150	150	150
		3.5 kHz	66	78	90	109	120	134
		7 kHz	32	45	52	60	66	73
		14 kHz	14	23	26	30	33	36
Frequency-dependent maximum current @ *fs* *Basic Time Period = 83.3 µs (Parameter is22=2)*	I_{out_max} / %	1.5 kHz	90	108	129	150	150	150
		3 kHz	74	88	103	130	142	150
		6 kHz	41	53	61	70	76	84
		12 kHz	16	26	30	34	37	41
Frequency-dependent maximum current @ *fs* *Basic Time Period = 100 µs (Parameter is22=3)*	I_{out_max} / %	1.25 kHz	90	108	129	150	150	150
		2.5 kHz	82	98	116	150	150	150
		5 kHz	50	60	69	80	87	96
		10 kHz	20	32	37	42	46	51

Table 16: Frequency-dependent maximum current for device size 27

Device size			**28** [1]					
Rated switching frequency			**2 kHz**					
Output frequency		**f_{out} / Hz**	**0**	**1,5**	**6**	**10**	**25**	**50**
Frequency-dependent maximum current @ *fs* *Basic Time Period = 62.5 µs (Parameter is22=0)*	I_{out_max} / %	2 kHz	50	58	76	83	98	125
		4 kHz	25	38	50	54	60	64
		8 kHz	10	21	27	30	33	35
		16 kHz	3	10	14	15	17	18
Frequency-dependent maximum current @ *fs* *Basic Time Period = 71.4 µs (Parameter is22=1)*	I_{out_max} / %	1.75 kHz	50	58	76	83	98	125
		3.5 kHz	32	43	56	61	70	80
		7 kHz	14	25	33	36	40	43
		14 kHz	5	12	16	18	19	21
Frequency-dependent maximum current @ *fs* *Basic Time Period = 83.3 µs (Parameter is22=2)*	I_{out_max} / %	1.5 kHz	50	58	76	83	98	125
		3 kHz	38	48	63	86	79	95
		6 kHz	18	29	39	42	47	50
		12 kHz	7	14	18	20	22	24
Frequency-dependent maximum current @ *fs* *Basic Time Period = 100 µs (Parameter is22=3)*	I_{out_max} / %	1.25 kHz	50	58	76	83	98	125
		2.5 kHz	44	53	70	75	89	110
		5 kHz	22	33	44	48	54	57
		10 kHz	9	17	23	25	28	30

Table 17: Frequency-dependent maximum current for device size 28

[1] *For size 28 drive controller with E (special device) on the 9th. Position in the type code.*

Device size			**28** [1]					
Rated switching frequency			**2 kHz**					
Output frequency		**f_{out} / Hz**	**0**	**1,5**	**3**	**6**	**10**	**25**
Frequency-dependent maximum current @ *fs* *Basic Time Period = 62.5 µs (Parameter is22=0)*	I_{out_max} / %	2 kHz	100	107	120	150	150	150
		4 kHz	58	70	85	115	128	150
		8 kHz	34	38	44	51	55	61
		16 kHz	17	19	22	26	28	31
Frequency-dependent maximum current @ *fs* *Basic Time Period = 71.4 µs (Parameter is22=1)*	I_{lim} / %	1.75 kHz	100	107	120	150	150	150
		3.5 kHz	69	79	94	123	138	150
		7 kHz	40	46	54	67	73	83
		14 kHz	20	22	26	30	33	36
Frequency-dependent maximum current @ *fs* *Basic Time Period = 83.3 µs (Parameter is22=2)*	I_{lim} / %	1.5 kHz	100	107	120	150	150	150
		3 kHz	79	88	103	132	147	150
		6 kHz	46	54	65	83	92	105
		12 kHz	23	26	30	34	37	42
Frequency-dependent maximum current @ *fs* *Basic Time Period = 100 µs (Parameter is22=3)*	I_{lim} / %	1.25 kHz	100	107	120	150	150	150
		2.5 kHz	90	97	112	141	150	150
		5 kHz	52	62	75	99	110	127
		10 kHz	28	32	37	42	46	52

Table 18: Frequency-dependent maximum current for device size 28

[1] *Only available as fluid cooler (water)*

Device size			28					
Rated switching frequency			2 kHz					
Output frequency		f_{out} / Hz	0	1,5	3	6	10	25
Frequency-dependent maximum current @ *fs* *Basic Time Period = 62.5 µs (Parameter is22=0)*	I_{out_max} / %	2 kHz	84	99	112	126	138	150
		4 kHz	54	71	81	94	101	108
		8 kHz	30	40	47	56	62	66
		16 kHz	9	11	13	16	20	26
Frequency-dependent maximum current @ *fs* *Basic Time Period = 71.4 µs (Parameter is22=1)*	I_{out_max} / %	1.75 kHz	84	99	112	126	138	150
		3.5 kHz	61	78	89	102	110	121
		7 kHz	36	48	56	65	72	77
		14 kHz	13	16	19	24	28	36
Frequency-dependent maximum current @ *fs* *Basic Time Period = 83.3 µs (Parameter is22=2)*	I_{out_max} / %	1.5 kHz	84	99	112	126	138	150
		3 kHz	69	85	97	110	119	133
		6 kHz	42	55	64	75	81	87
		12 kHz	17	21	25	31	36	45
Frequency-dependent maximum current @ *fs* *Basic Time Period = 100 µs (Parameter is22=3)*	I_{out_max} / %	1.25 kHz	84	99	112	126	138	150
		2.5 kHz	77	92	104	118	129	146
		5 kHz	48	63	73	84	91	98
		10 kHz	23	30	36	43	49	56

Table 19: Frequency-dependent maximum current for device size 28

3.2.4 Overview of rectifier data for 400 V devices

Device size			25	26	27	28
Rectifier rated power		P_{rect} / kW	120	144	174	217
Rectifier continuous power	1)	P_{rect_cont} / kW	217	217	217	217
Continuous input current @ U_N = 400 V	1)	I_{in_cont} / A	390	390	390	390
Continuous input current @ U_{N_UL} = 480 V	1)	$I_{in_UL_cont}$ / A	337	337	337	337
Rated output current DC @ U_{N_dc} = 565V		I_{out_dc} / A	266	317	380	469
Continuous output current DC @ U_{N_dc} = 565 V	1)	$I_{out_dc_cont}$ / A	469	469	469	469
Rated output current DC @ $U_{N_UL_dc}$ = 680 V		$I_{out_UL_dc}$ / A	228	266	330	412
Continuous output current DC @ $U_{N_UL_dc}$ = 680 V	1)	$I_{out_UL_dc_cont}$ / A	412	412	412	412

Table 20: Overview of rectifier data for 400 V devices

1) *Continuous operation is a load that exceeds the rated operation. Continuous operation only occurs if the internal rectifier is used to supply additional drive controllers via the DC terminals => „5.3.6 DC-bus connection“. In continuous operation, the OH error can be triggered depending on the operating conditions of the internal inverter.*

3.2.5 Power dissipation at rated operation

Device size			25	25 [4]	26	27	28 [3]	28 [4]	28
Rated switching frequency		f_{SN} / kHz	4	4	4	2	2	2	2
Power dissipation at rated operation	[1]	P_D / kW	2,2	2,1	2,7	2,7	3,556	3,556	3,8
Power dissipation at rated operation DC	[2]	P_{D_dc} / kW	1,98	1,98	2,38	2,26	2,91	2,91	3,15

Table 21: Power dissipation of the 400 V devices

[1] *Rated operation corresponds to U_N = 400 V; f_{SN} ; I_N ; f_N = 50 Hz (typically value)*

[2] *Rated operation DC corresponds to U_{N_dc} = 565 V; I_N (typical value)*

[3] *For size 28 drive controller with E (special device) on the 9th. Position in the type code.*

[4] *Fluid cooler only (water)*

3.2.6 Fusing of the 400 V devices

3.2.6.1 Fuse protection for AC supply

Device size	Max. size of the fuse / A				
	U_N = 400V gG (IEC)	U_N = 480V class „J“	U_N = 480V class „J“	U_N = 480V	
	SCCR 30 kA	SCCR 10 kA	SCCR 18 kA	SCCR 100 kA	Type
25	250	250	---	250	SIBA 206xy32.250
					COOPER BUSSMANN 170M4xy9
					LITTELFUSE PSR030yy0250
26	315	300	---	315	SIBA 206xy32.315
					COOPER BUSSMANN 170M4xy0
					LITTELFUSE PSR030yy0315
27	355	350	---	350	SIBA 206xy32.350
					COOPER BUSSMANN 170M4xy1
					LITTELFUSE PSR030yy0350
28	400	---	450	450	SIBA 206xy32.450
					COOPER BUSSMANN 170M4xy3
					LITTELFUSE PSR030yy0450

Table 22: AC fusing for 400 V / 480 V devices

[1] *„x“ stands for various indicators. „y“ stands for different connection variants.*

Short-circuit capacity

According to the requirements of EN 61439-1 and EN 61800-5-1, the following applies to connection to a power supply: The devices are suitable for use in a circuit capable of delivering not more than 30 kA eff. unaffected symmetrical short-circuit current.

3.2.6.2 Fuse protection of the 400 V units ati DC-supply

Device size	Recommended size of the fuse / A		Permissible fuses [1]
	U_{N_dc} = 565V	$U_{N_UL_dc}$ = 680V	
	SCCR 85 kA	SCCR 85 kA	
25	350	300	SIBA 20 568 34.400 2[2] Bussmann 170M4246 Bussmann 170M6245 Littelfuse PSR073DL0700
26	400	350	
27	500	400	
28	630	500	

Table 23: DC Fusing of the 400 V / 480 V devices

[1] *Fuses of the same type with lower rated currents can be used if they are suitable for the application.*

[2] *Fuse without UL certification.*

NOTICE

Observe the rated voltage of the fuse!

► The rated voltage of the fuse must be at least equal to the maximum DC supply voltage of the drive controller.

3.3 General electrical data

3.3.1 Switching frequency and temperature

The drive controller cooling is designed by way that the heat sink overtemperature threshold is not exceeded at rated conditions. A switching frequency higher than the rated switching frequency also produces higher losses and thus a higher heat sink heating.

If the heat sink temperature reaches a critical threshold (T_{DR}), the switching frequency can be reduced automatically step by step. This prevents that the drive controller switches off due to overheating of the heat sink. If the heat sink temperature falls below the treshold T_{UR}, the switching frequency is increased back to the setpoint. At temperature T_{EM} the switching frequency is immediately reduced to rated switching frequency. „Derating“ must be activated, for this function to work.

3.3.1.1 Switching frequencies and temperatures for air coolers

Device size			**25**	**26**	**27**	**28** [3]	**28**
Rated switching frequency	[1]	f_{SN} / kHz	4	4	2	2	2
Max. switching frequency	[1]	f_{S_max} / kHz	16				
Min. switching frequency	[1]	f_{S_min} / kHz	1,25				
Max. heat sink temperature1		T_{HS1} / °C	77	94	92	97	105
Max. heat sink temperature 2		T_{HS2} / °C	73	80	81	90	97
Max. heat sink temperature 3		T_{HS3} / °C	74	83	83	97	97
Max. interior temperature power unit 1		T_{ID_PU1} / °C	65	65	65	65	65
Max. interior temperature power unit 2		T_{ID_PU2} / °C	75	75	75	75	75
Max. interior temperature power unit 3		T_{ID_PU3} / °C	90	90	90	90	90
Temperature for derating the switching frequency	[2]	T_{DR} / °C	67	84	82	87	95
Temperature for uprating the switching frequency	[2]	T_{UR} / °C	57	74	72	77	85
Temperature for switching to rated switching frequency	[2]	T_{EM} / °C	72	89	87	92	100

Table 24: Switching frequency and temperature of the 400 V devices (air cooled)

[1] *The output frequency is to be limited in such a way that it does not exceed 1/10 of the switching frequency.*

[2] *The switching frequency refers to the temperature of T_{HS1}.*

[3] *For size 28 drive controller with E (special device) on the 9th. Position in the type code.*

3.3.1.2 Switching frequencies and temperatures for fluid coolers (water)

Device size			**25**	**25** [3]	**26**	**27**	**28**
Rated switching frequency	[1]	f_{SN} / kHz	4	4	4	2	2
Max. switching frequency	[1]	f_{S_max} / kHz	16				
Min. switching frequency	[1]	f_{S_min} / kHz	1,25				
Max. heat sink temperature1		T_{HS1} / °C	77	70	94	92	80
Max. heat sink temperature 2		T_{HS2} / °C	73	73	80	81	70
Max. heat sink temperature 3		T_{HS3} / °C	74	70	83	83	72
Max. interior temperature power unit 1		T_{ID_PU1} / °C	65	65	65	65	65
Max. interior temperature power unit 2		T_{ID_PU2} / °C	75	75	75	75	75
Max. interior temperature power unit 3		T_{ID_PU3} / °C	90	90	90	90	90
Temperature for derating the switching frequency	[2]	T_{DR} / °C	67	65	84	82	70
Temperature for uprating the switching frequency	[2]	T_{UR} / °C	57	60	74	72	60
Temperature for switching to rated switching frequency	[2]	T_{EM} / °C	72	68	89	87	75

Table 25: Switching frequency and temperature of the 400 V devices (watercooled)

[1] *The output frequency is to be limited in such a way that it does not exceed 1/10 of the switching frequency.*

[2] *The switching frequency refers to the temperature of T_{HS1}.*

[3] *With high-performance heat sink*

3.3.2 DC link / braking transistor function

Activation of the braking transistor function

To be able to use the braking transistor, the function must be activated with parameter "is30 braking transistor function".

For more information => *F6 Programming manual*.

NOTICE

Falling below the minimum braking resistor value!

Destruction of the drive controller

► The minimum brake resistance value must not fall below!

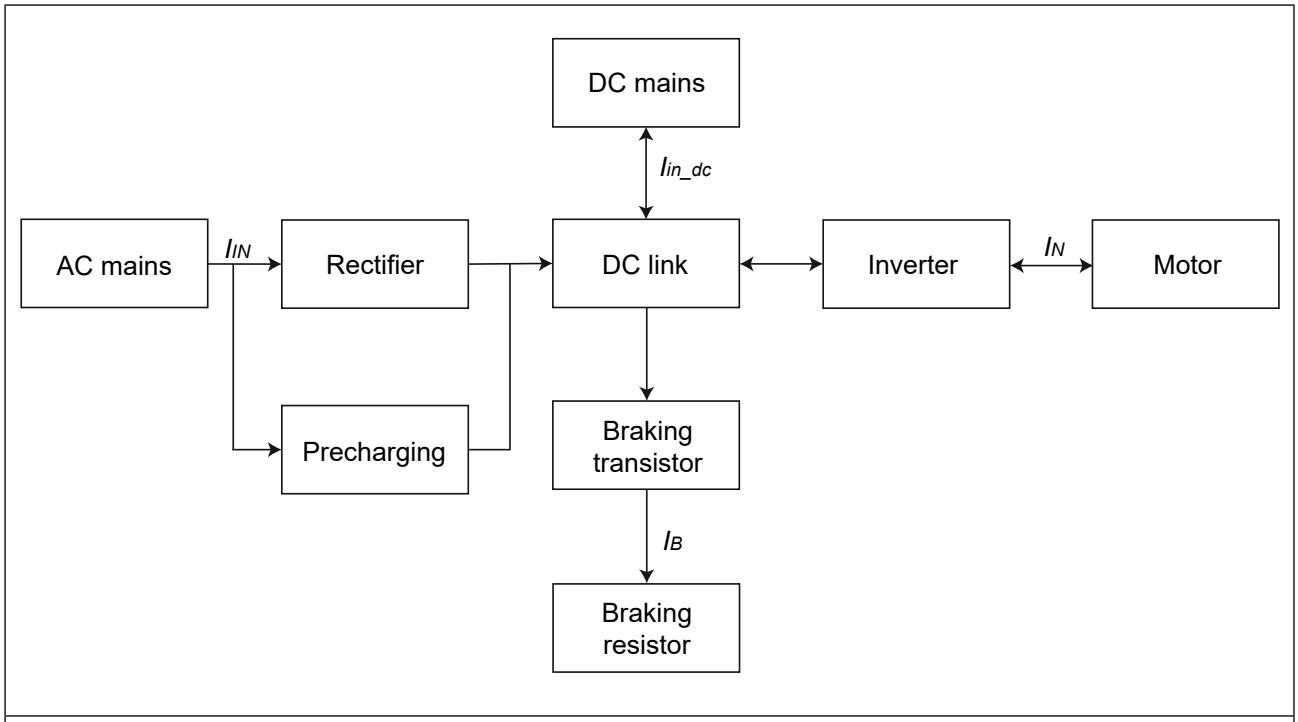

Figure 5: Block diagram of the energy flow

NOTICE

Destruction of the drive controller!

If the error "ERROR GTR7 always ON" occurs, the current consumption is switched off internally via the mains input bridge of the AC supply.

► If the error "ERROR GTR7 always ON" occurs, the drive controller is defective and must be disconnected from the power supply no later than 16 hours!

► With DC mains connection and the use of non-intrinsically safe braking resistors or sub-mounted braking resistors, the drive controller must be de-energised after 1 second at the latest.

3.3.2.1 DC link / braking transistor function

Device size			25	26	27	28
Rated DC link voltage @ U_N = 400V		U_{N_dc} / V	565			
Rated DC link voltage @ U_{N_UL} = 480V		$U_{N_dc_UL}$ / V	680			
DC link voltage working voltage range		U_{in_dc} / V	390...780			
DC switch-off level "ERROR underpotential“		U_{UP} / V	240			
DC switch-off level "ERROR overpotential“		U_{OP} / V	840			
DC switch-off level braking resistor	1)	U_B / V	780			
Max. braking current		I_{B_max} / A	382			
Min. braking resistor value		R_{B_min} / Ω	2,2			
Braking transistor	2)		Max. cycle time: 120 s; Max c.d.f.: 50 %			
Protective function for braking transistor			Short-circuit monitoring			
Protective function braking resistor (Error GTR7 always on)	3)		Feedback signal evaluation and current switch-off (only for AC mains connection)			
DC link capacity		C_{int} / µF	6600	7800	10400	12400
Max. prechargeable total capacity @ U_N = 400 V		C_{pc_max} / µF	34200	34200	34200	34200
Max. prechargeable total capacity @ U_{N_UL} = 480 V		$C_{pc_max_UL}$ / µF	23700	23700	23700	23700

Table 26: DC link / braking transistor function of the 400 V devices

1) *The DC switching level for the braking transistor is adjustable. The default value is the value specified in the table.*

2) *The cyclic duration factor is additionally limited by the used braking resistor.*

3) *The feedback signal evaluation monitors the functionality of the braking transistor. Power off occurs via the internal mains input bridge of the AC supply. There is no current switch-off with DC power supply.*

3.3.3 Sub-mounted braking resistors

Technical data of the sub-mounted braking resistors		
Braking resistor value	R / Ω	4
Rated power	P_D / W	1460
Duty cycle referring to 120s @ U_{N_dc} = 780V	*duty cycle* / s	0,9

Table 27: Sub-mounted braking resistors

NOTICE

Observe the power dissipation of the sub-mounted braking resistors.

In braking mode (with sub-mounted braking resistors), the power to be dissipated by the heat sink increases.

► Observe the power dissipation of the braking resistors when designing the cooling system.

3.3.4 Fan

Device size		25	26	27	28
Interior fan	Number	2			
	Speed-variable	yes			
Heat sink fan [1]	Number	2			
	Speed-variable	yes			

Table 28: Fan

[1] External heat sink fan supply => *„5.3.7 External heat sink fan supply (FAN)“*

The fans are speed-adjustable. They are automatically controlled to high or low speed depending on the setting of the temperature limits in the software.

NOTICE

Destruction of the fan!

► Take care that no foreign substances drop into the fan!

3.3.4.1 Switching behaviour of the fans

Temperature monitoring controls the fans with various switch-on and switch-off points.

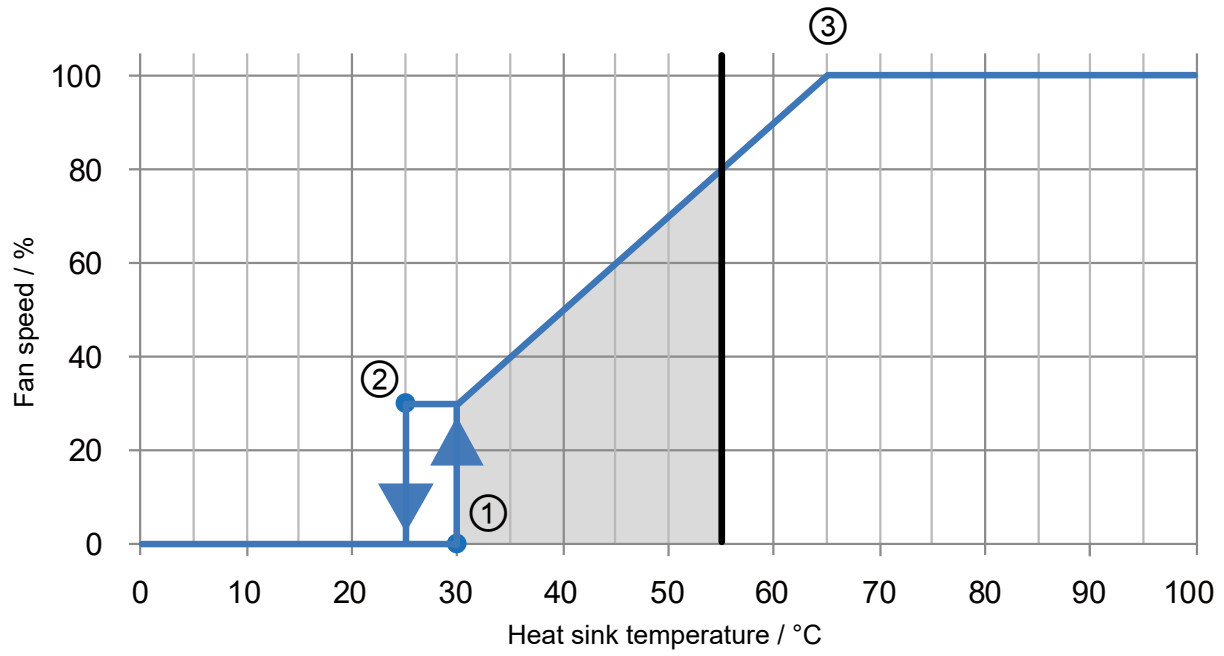

Legend	
	Fan speed in dependence on the temperature
	Setting range for the switch-on temperature
	Maximum switch-on temperature
1	Switch-on point
2	Switch-off point
3	Switching point maximum speed level

Figure 6: Switching behaviour of the fans example heat sink fan

3.3.4.2 Switching points of the fans

The switching point for the switch-on temperature and the maximum speed level of the fans are adjustable. The following table shows the default values.

Fan		Heat sink	Interior
Switch-on temperature	*T* / °C	30	20
Maximum speed level	*T* / °C	70	40

Table 29: Switching points of the fans

4 Installation

4.1 Dimensions and weights

4.1.1 Built-in version air cooler

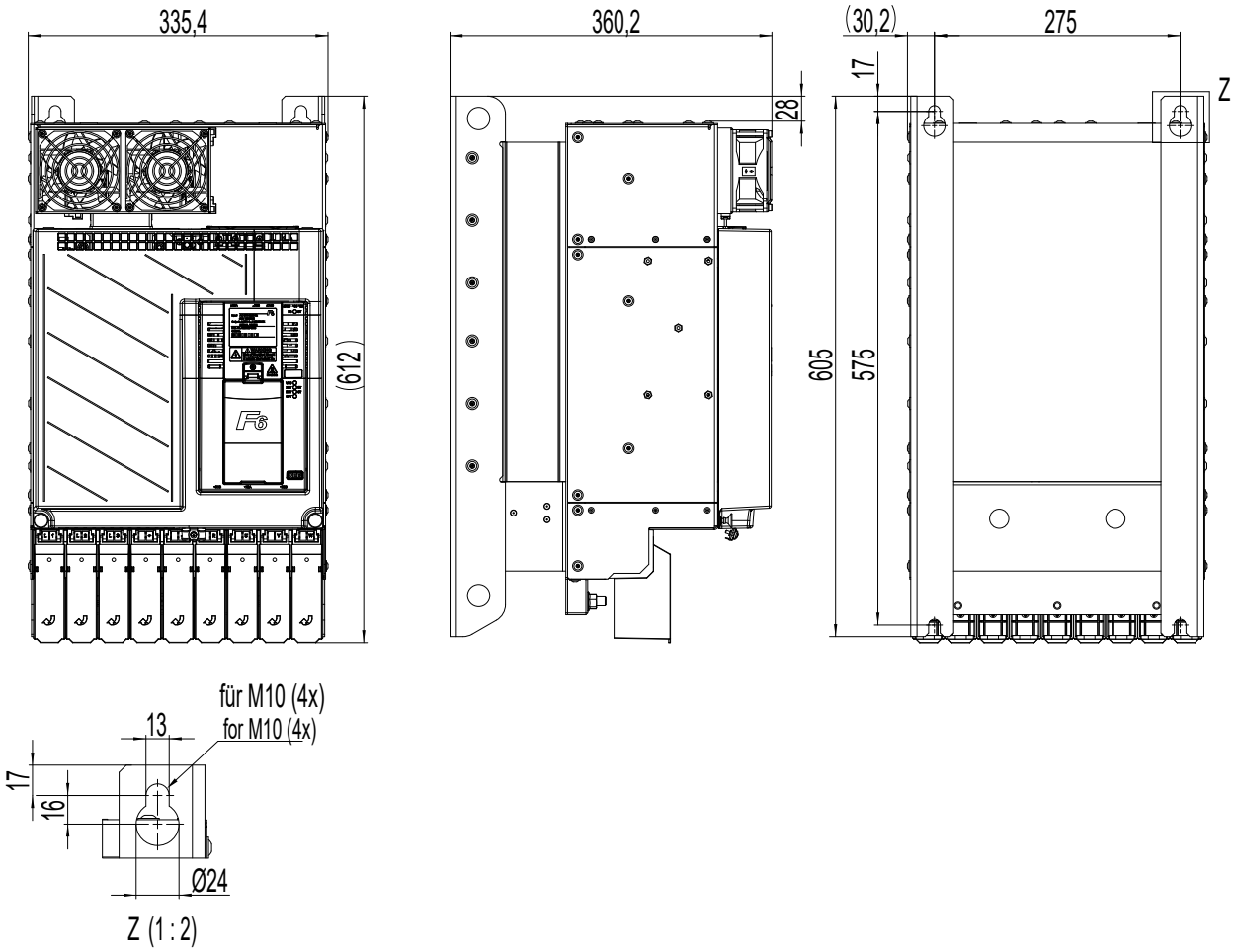

Housing	7
Weight	56.5 kg
Dimensions	All dimensions in mm

Figure 7: Dimensions built-in version air cooler

4.1.2 Push-through version air cooler IP20, IP54-ready

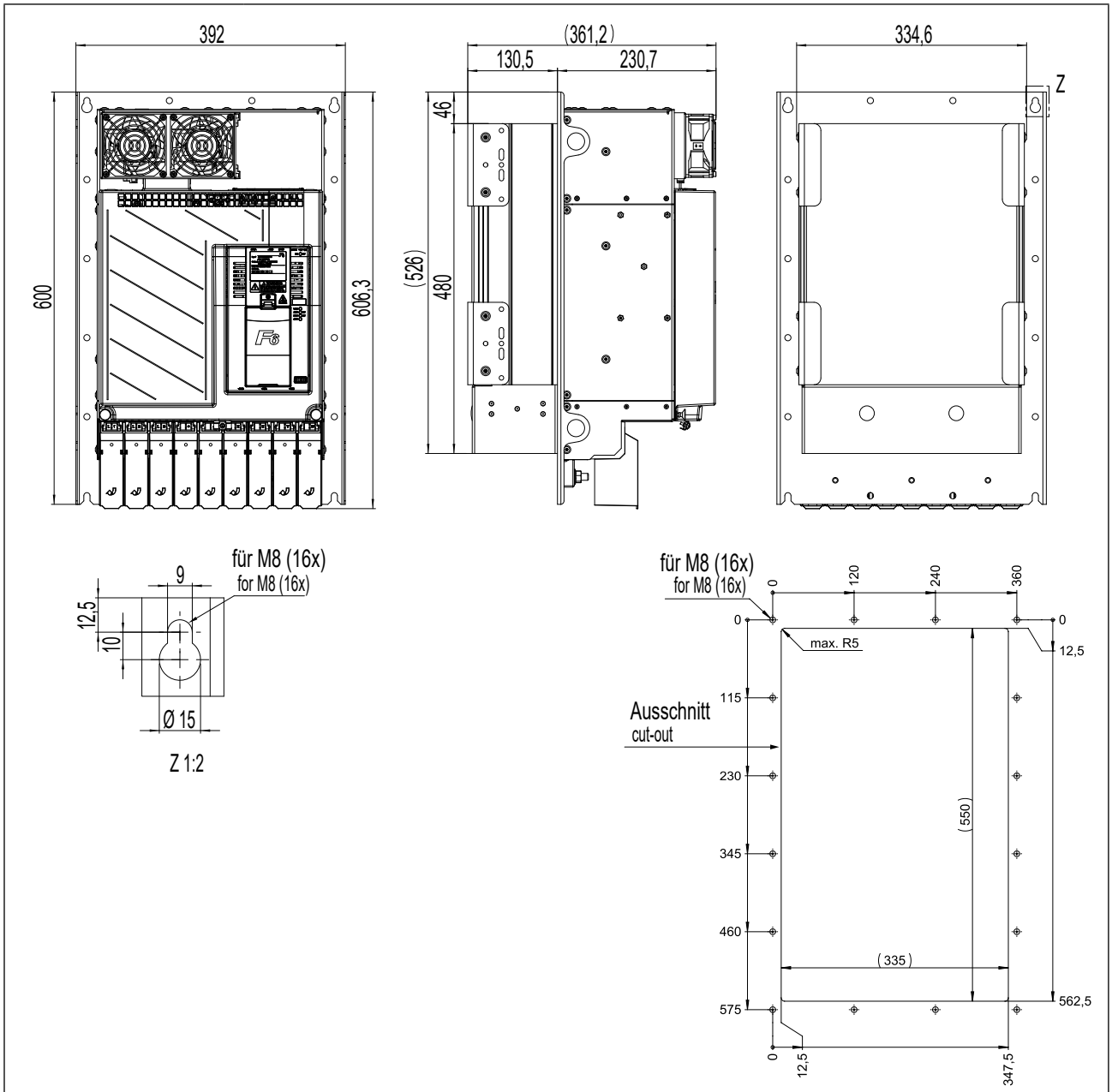

Housing	7
Weight	59.4 kg
Dimensions	All dimensions in mm

Figure 8: Dimension Push-through version air cooler IP20, IP54-ready

4.1.3 Built-in version fluid cooler (water)

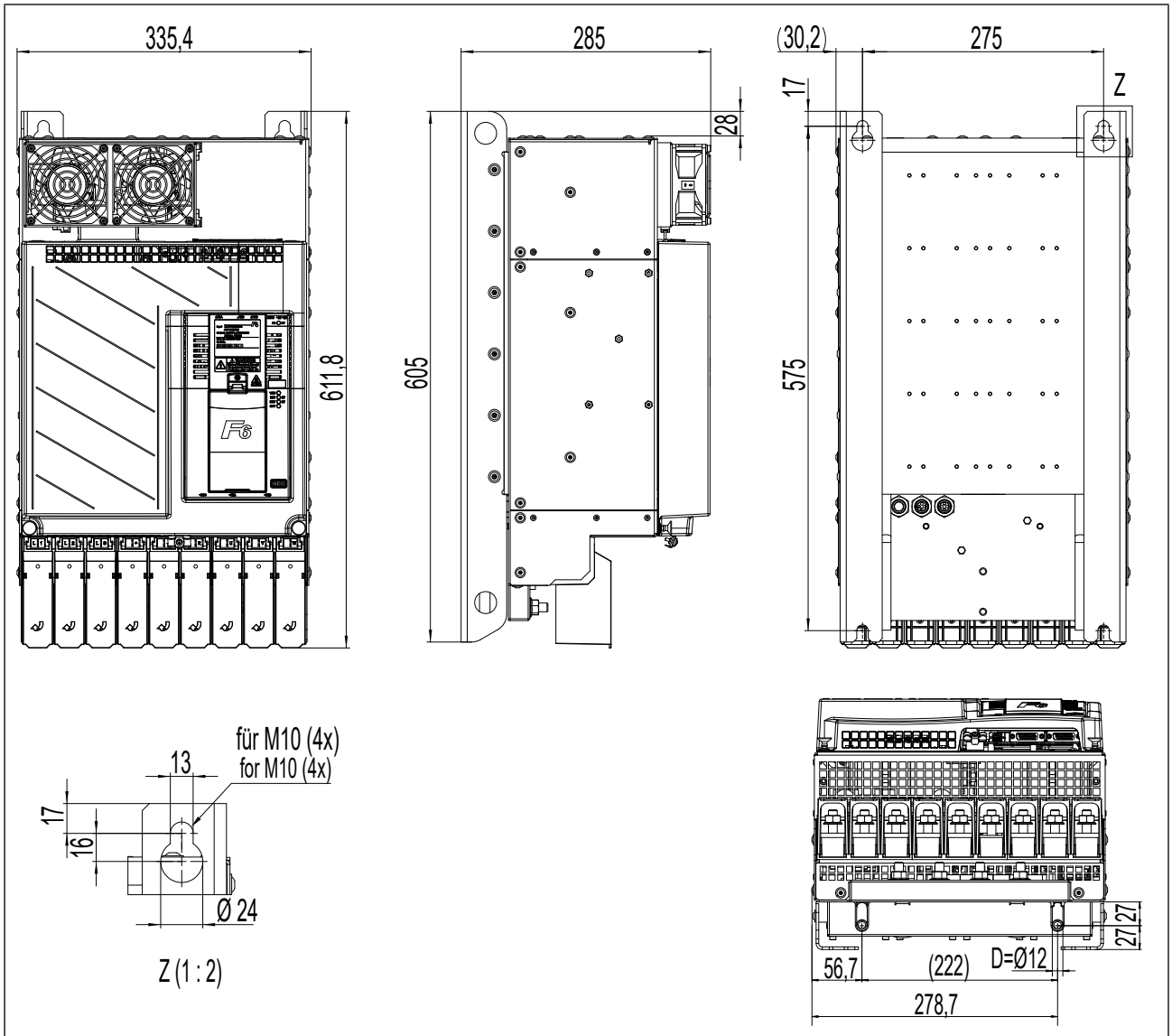

Housing	7
Weight	42.8 kg without sub-mounted braking resistors 47 kg with sub-mounted braking resistors
Dimensions	All dimensions in mm

Figure 9: Dimensions built-in version fluid cooler (water)

4.1.4 Push-through version fluid cooler (water) IP20, IP54-ready

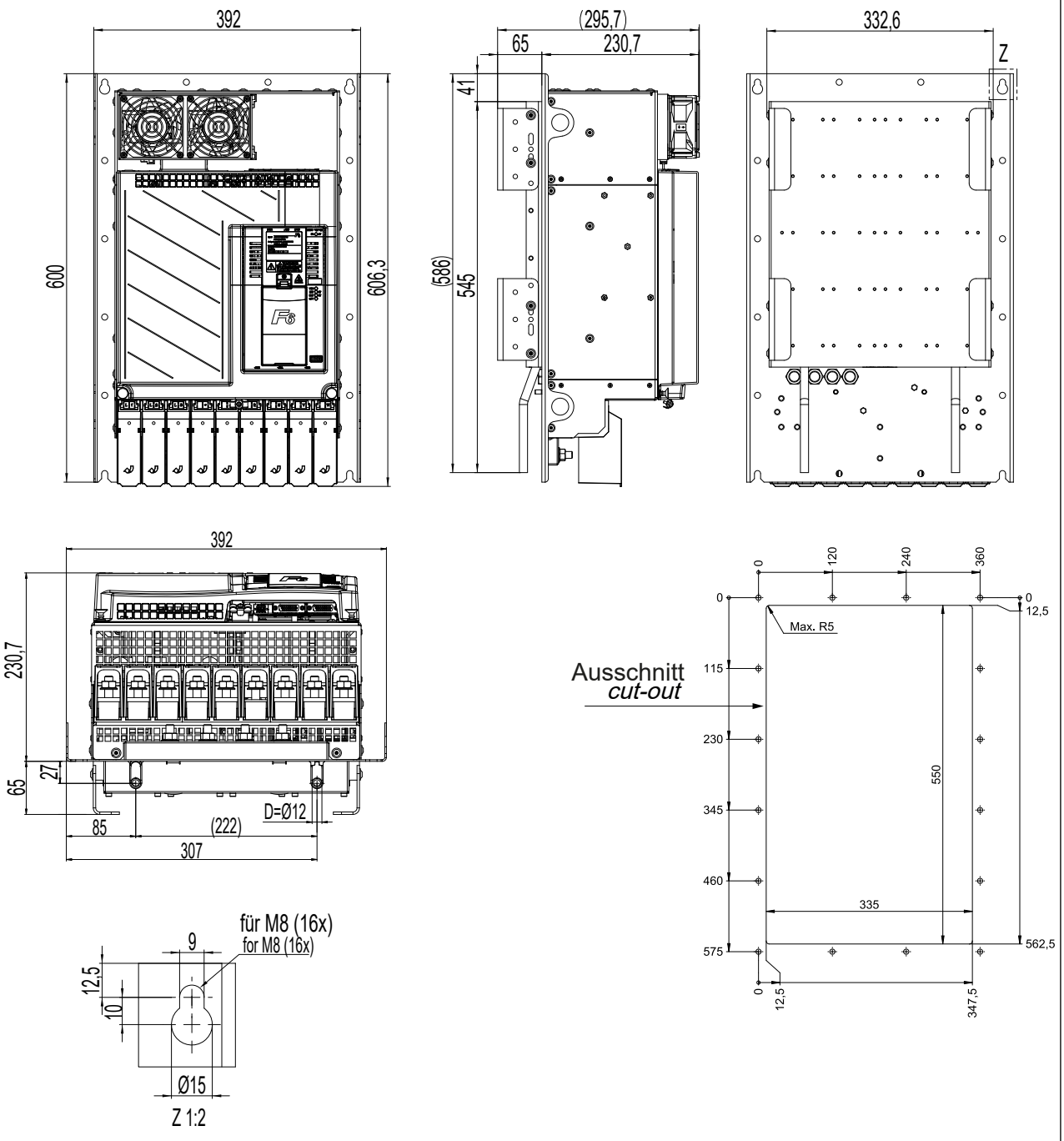

Housing	7
Weight	45.7 kg without sub-mounted braking resistors 49.9 kg with sub-mounted braking resistors
Dimensions	All dimensions in mm

Figure 10: Dimensions push-through version fluid cooler (water) IP20, IP54-ready

4.1.5 Built-in version Fluid cooler (water) High performance, IP54-ready

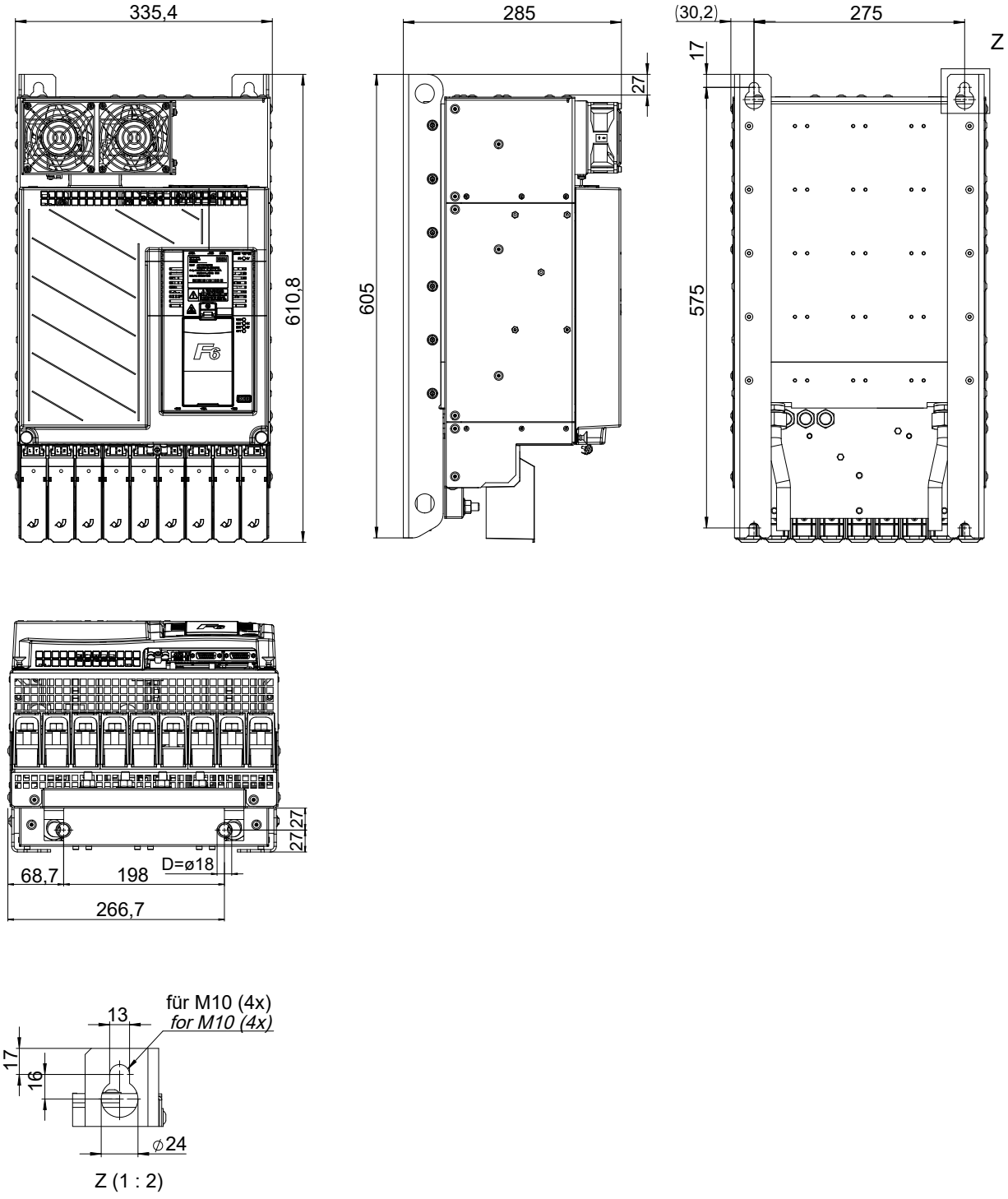

Housing	7
Weight	45.5 kg
Dimensions	All dimensions in mm

Figure 11: Dimension Built-in version Fluid cooler (water) High performance, IP54-ready

4.1.6 Built-in version Fluid cooler (water) High performance, IP54-ready

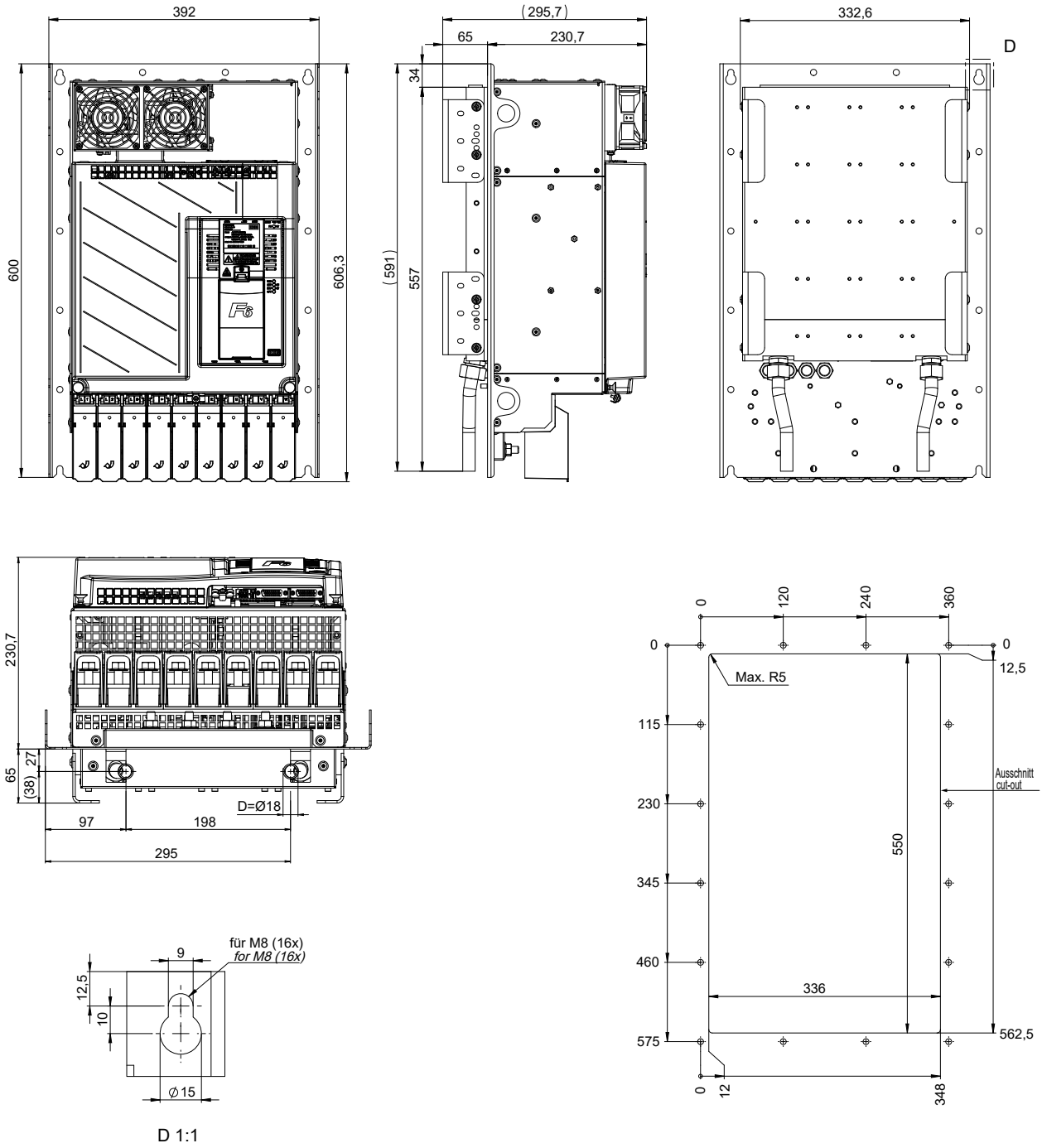

Housing	7
Weight	48.4 kg
Dimensions	All dimensions in mm

Figure 12: Dimension Built-in version Fluid cooler (water) High performance, IP54-ready

4.2 Control cabinet installation

4.1.7 Control cabinet installation

Drive controllers in housings 7, 8 and 9 have 2 threaded bushes for M10 ring bolts according to *DIN 580* on the top. These are used to accommodate appropriate lifting devices for transport.

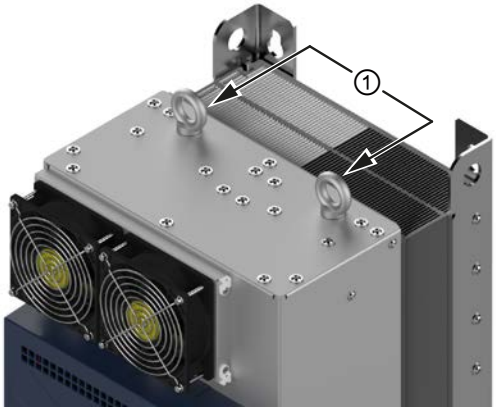

Legend	
1	M10 ring bolts

Figure 13: Example of an F6 in housing 8 with M10 ring bolts

4.1.8 Devices with transport bracket

The transport bracket can be removed after mounting the drive controller. The transport brackets must be stored to make the drive controller transportable again in case of service.

NOTICE

Damage caused by improper mounting

► The transport brackets must not be used to fasten the drive controller!

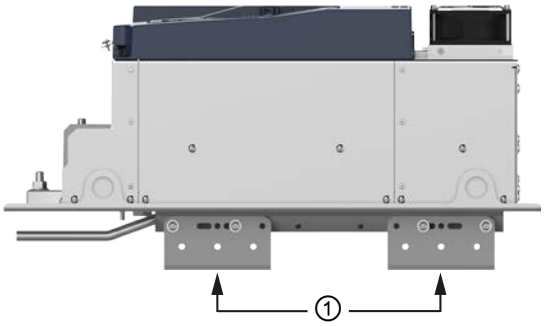

Legend	
1	Transport bracket

Figure 14: Example of an F6 housing 7 with transport brackets

NOTICE

Damage to the water connections

Bending of the tubes!

► Never set the device down or transport it without the transport brackets!

4.2.1 Mounting instructions

For the mounting of the drive controllers the following mounting materials with the appropriate quality were tested by KEB.

Required material	Tightening torque
Hexagon head screw *ISO 4017* - M10 - 8.8	50 Nm 442 lb-in
Flat washer *ISO 7090* - 10 - 200 HV	–

Table 30: Mounting instructions for built-in version

Required material	Tightening torque
Hexagon head screw *ISO 4017* - M8 - 8.8	25 Nm 221 lb-in
Flat washer *ISO 7090* - 8 - 200 HV	–

Table 31: Mounting instructions for push-through version

NOTICE

Use of other fixing material

► When using alternative fixing materials, the material characteristics (quality) and tightening torques must be observed!

The use of other fixing materials is beyond the control of KEB and is therefore the sole responsibility of the customer.

4.2.2 Mounting distances

Power loss for the control cabinet dimension *„3.2.5 Power dissipation at rated operation“*. A lower value can be used here depending on the operating mode/load.

Mounting the drive controller

For reliable operation, the drive controller must be mounted without any distance on a smooth, closed, metallically bright mounting plate.

Mounting distances	Dimension	Distance in mm	Distance in inch
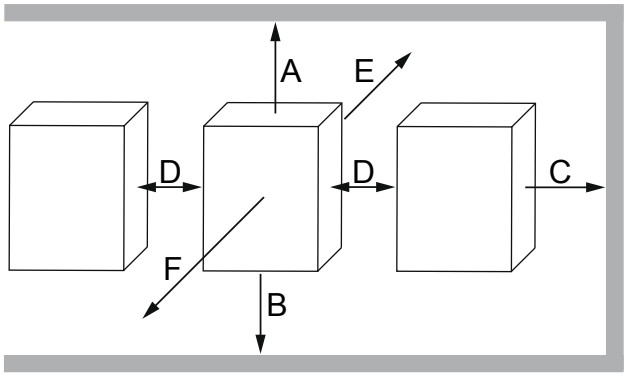	A	150	6
	B	100	4
	C	30	1.2
	D	0	0
	E	0	0
	F [1]	50	2

[1] Distance to preceding elements in the control cabinet door.

Figure 15: Mounting distances

4.2.3 Installation of IP54-ready devices

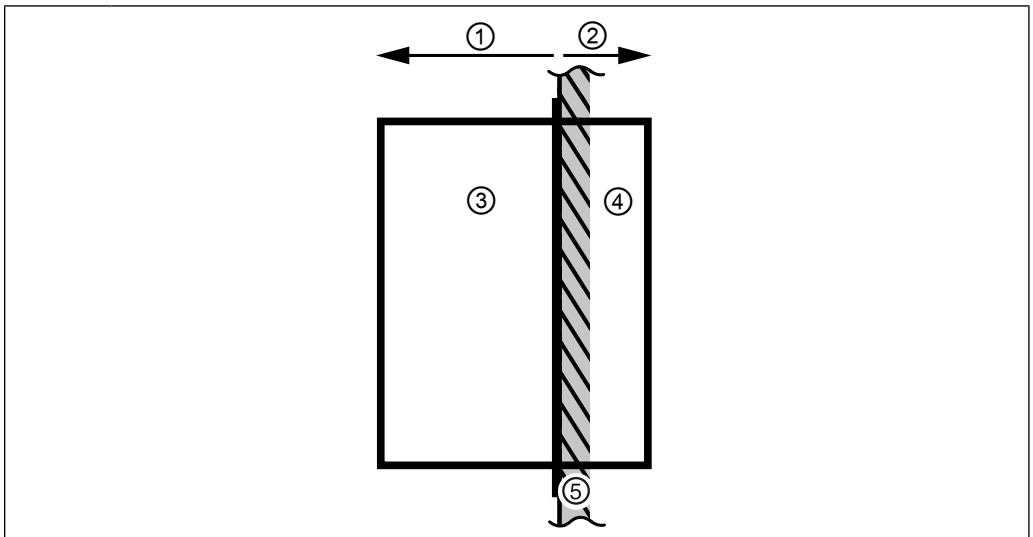

Legend	
1	IP20 zone inside the housing
2	IP54 zone outside the housing
3	Drive controller (power unit and control unit)
4	Drive controller (heat sink)
5	Housing (e.g. Control cabinet wall)

Figure 16: Installation of IP54-ready devices

IP54 zone: Heat sink outside the housing (Control cabinet)

The protection class IP54 can only be achieved when the device is properly installed.

For proper installation, a suitable IP54 seal (=> *„5.4.2 Seal for IP54-ready devices“*) must be installed between heat sink and housing (e.g. control cabinet wall).

The tightness must be checked after the installation. If properly installed, the separation to the housing corresponds to degree of protection IP54.

In the case of fan-cooled units, the fans must be protected from negative environmental influences.

These include combustible, oily or dangerous fumes or gases, corrosive chemicals, coarse foreign bodies and excessive dust. This applies especially to the access of the heatsink from the top (air outlet).Icing is inadmissible.

UL: Device heat sink is classified as NEMA type 1

IP20 zone: Device inside the housing

This part is intended for the installation in a suitable housing for the required degree of protection (e.g. control cabinet).

The power connections are excluded => *„3.1.1 Climatic environmental conditions“*.

NOTICE

Defect due to continuous splash water !

► Never expose the device to continuous splashing water (e.g. direct exposure to rain)!

4.2.4 Control cabinet ventilation

If construction-conditioned the control cabinet cannot be without indoor ventilation, appropriate filters must avoid suction of foreign objects.

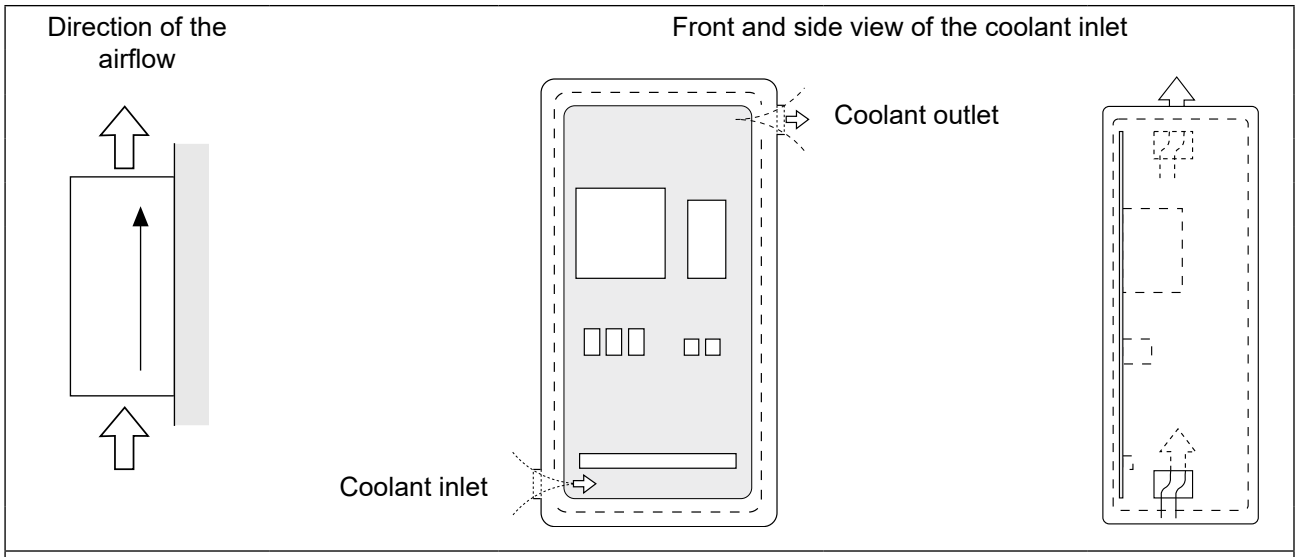

Figure 17: Control cabinet ventilation

4.2.5 Airflow of the drive controller

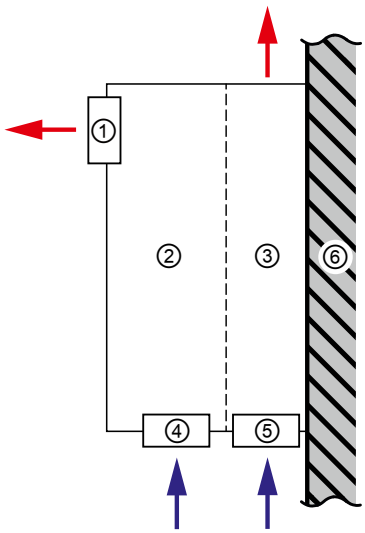

Legend	
→	Airflow direction
1	Interior fan (from housing 4)
2	Drive controller (power unnit and control)
3	Drive controller (heat sink)
4	Interior fan for (housing 2 and 3)
5	Heatsink fan
6	Housing (e.g. Control cabinet rear)

Figure 18: Airflow of the drive controller

5 Installation and connection

5.1 Overview of the COMBIVERT F6

Housing 7	No.	Name	Description
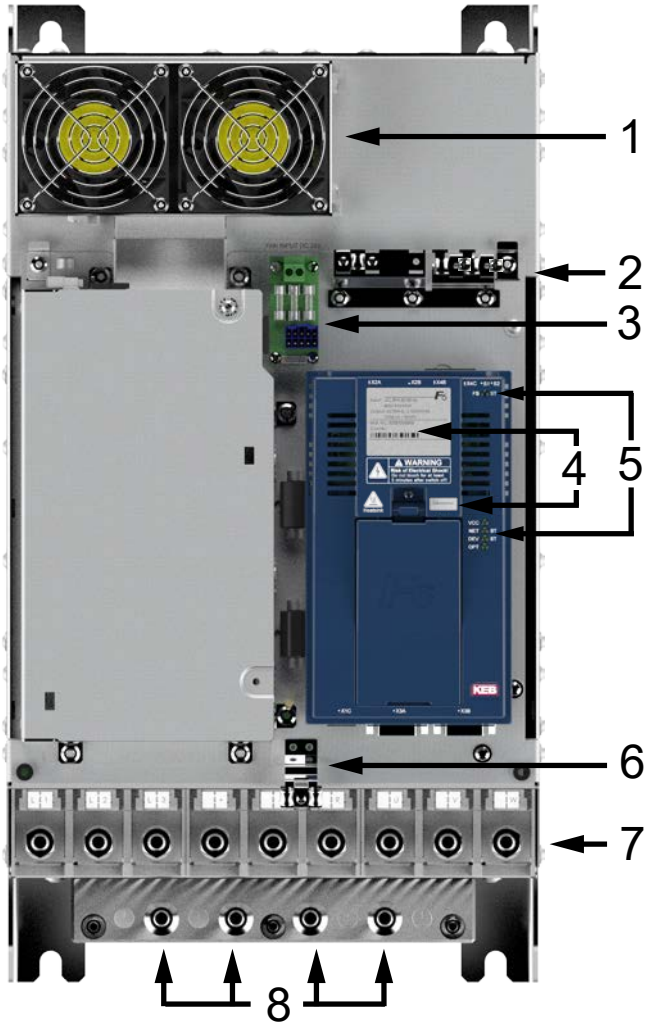	1	---	Interior fan
	2/6	---	Shield clamps for shielded control lines
	3	FAN	External heat sink fan supply[1)]
	4	---	Nameplates
	5	---	LEDs (see the manual for control unit chapter "Overview“) • For control board COMPACT: FS without function. • For control card APPLICATION and PRO: Status indication of the safety module
	7	X1A	Power circuit terminals for: • Mains input • Braking resistor • DC voltage interface • Motor connection
	8	PE	Protective earth; at connection to protective earth, each connection point may only be occupied once

Figure 19: F6 housing 7 top view

[1)] *External heat sink fan supply => „5.3.7 External heat sink fan supply (FAN)“*

Housing 7	No.	Name	Description
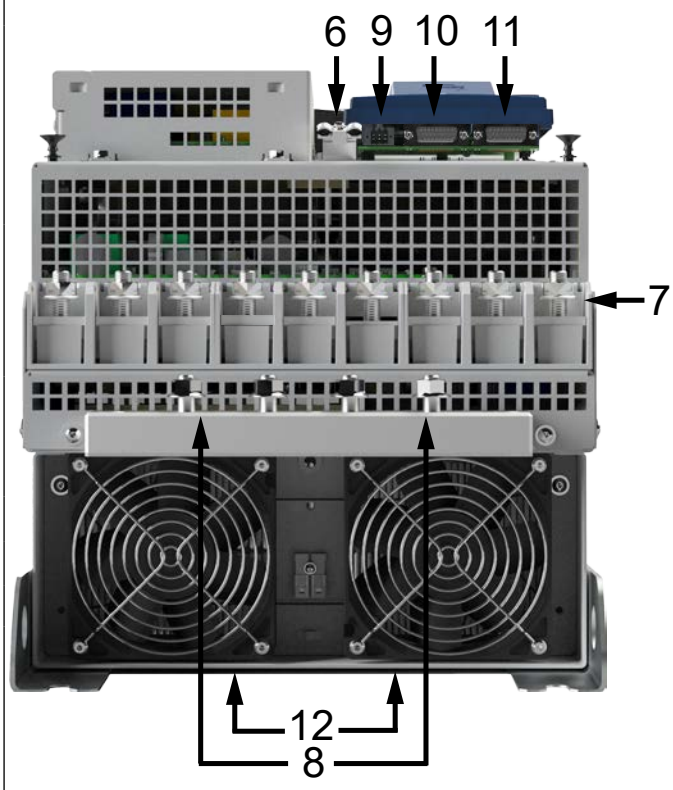	6	---	Shield clamps for shielded control lines
	7	X1A	Power circuit terminals for: • Mains input • Braking resistor • DC voltage interface • Motor connection
	8	PE	Protective earth; at connection to protective earth each terminal may be assigned only once
	9	X1C	Terminal for: • Motor temperature monitoring • Brake control
	10	X3A	Encoder interface channel A
	11	X3B	Encoder interface channel B
	12	---	Heat sink fan

Figure 20: F6 housing 7 front view

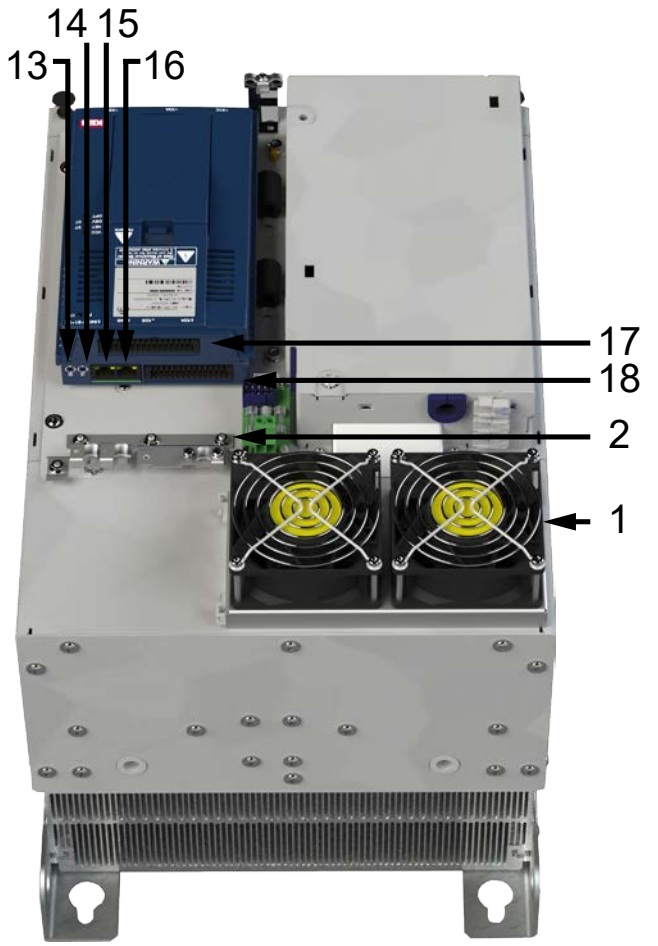

Housing 7	No.	Name	Description
	1	---	Interior fan
	2	---	Shield clamps for shielded control lines
	13	S1	Rotary coding switch A
	14	S2	Rotary coding switch B
	15	X4C	Fieldbus interface (out)
	16	X4B	Fieldbus interface (in)
	17	X2B	Safety module
	18	X2A	Control terminal block for • CAN bus • Analog inputs and analog output • Digital inputs and outputs • 24 V DC voltage supply

Figure 21: F6 housing 7 rear view with control board APPLICATION

Further information can be found in the respective control board manual.

Instructions for use COMBIVERT F6 control board APPLICATION
www.keb.de/fileadmin/media/Manuals/dr/ma_dr_f6-cu-a-inst-20118593_en.pdf

Instructions for use COMBIVERT F6 control board COMPACT
www.keb.de/fileadmin/media/Manuals/dr/ma_dr_f6-cu-k-inst-20144795_en.pdf

Instructions for use COMBIVERT F6 control board PRO
www.keb.de/fileadmin/media/Manuals/dr/ma_dr_f6-cu-p-inst-20182705_en.pdf

5.2 Connection of the power unit

NOTICE

Destruction of the drive controller!

► Never exchange mains input and motor output!

5.2.1 Connection of the voltage supply

The COMBIVERT F6 can be supplied via terminals L1, L2 and L3 (AC power supply) or via terminals + and - (DC power supply with inrush current limitation)

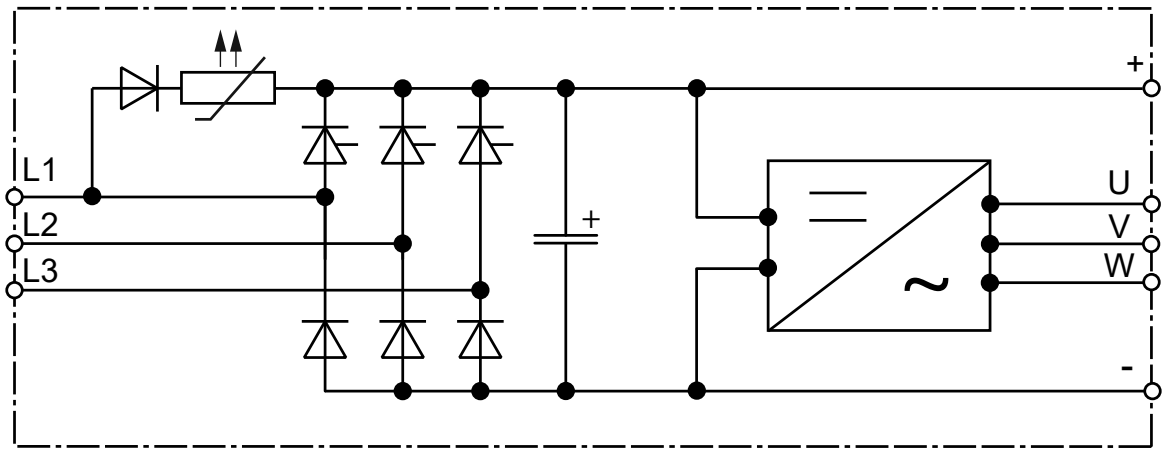

Figure 22: Input circuit

NOTICE

With AC power supply, observe the minimum waiting time between two switch-on procedures!

Cyclical switching off and on of the drive controller leads to temporary high impedance of the PTC precharging resistor. After the PTC precharging resistor has cooled down, it can be restarted without restrictions. The waiting time between two switch-on processes depends on the external capacitance, the AC mains voltage and the ambient temperature.

► Without external capacity: 5 min

► With external capacity (additional drive controllers): 20 min

NOTICE

No inrush current limitation with DC power supply!

► An external inrush current limiter must be provided for DC power supplies.

5.2.1.1 Terminal block X1A for 400 V devices



Name	Function	Cross-section for terminal connection	Tightening torque	Max. number of conductors
L1	Mains connection 3-phase	10 mm stud for M10 crimp connector	25 Nm 220 lb-in	2
L2				
L3				
+	DC terminals			
-				
R	Connection for braking resistor (between + and R)			
U	Motor connection			
V				
W				

Figure 23: Terminal block X1A for 400 V devices

5.2.2 Protective earth and functional earth

Protective and functional earth must not be connected to the same terminal.

5.2.2.1 Protective earth

The protective earth (PE) serves for electrical safety particularly personal protection in error case.

⚠ CAUTION

Electric shock due to incorrect dimensioning!



► The earthing cross-section complies with *VDE 0100* !

Name	Function	Terminal connection	Tightening torque	Max. number of conductors
PE, ⏚	Connection for protective earth	10 mm threaded pin for M10 crimp connectors	25 Nm 220 lb-in	1

Figure 24: Connection for protective earth

Incorrect installation of the PE connection

Only M10 threaded pins with nut may be used as connection for protective earth!

5.2.2.2 Functional earthing

A functional earthing may also be necessary, if for EMC requirements additional potential equalization between devices or parts of the system must be available.

The use of the functional earth (FE) is not required if the frequency inverter is EMC-technically wired.

The functional earth may not be wired green / yellow!

Notes on EMC-compatible installation can be found here.
www.keb.de/fileadmin/media/Manuals/emv/0000neb0000.pdf

5.3 Mains connection

5.3.1 Supply cable

The conductor cross-section of the supply cable is determined by the following factors:

- Input current of the drive controller
- Used line type
- Installation and ambient temperatures
- The locally valid electrical regulations

The application engineer is responsible for the design!

5.3.2 AC mains connection

5.3.2.1 AC supply 3-phase

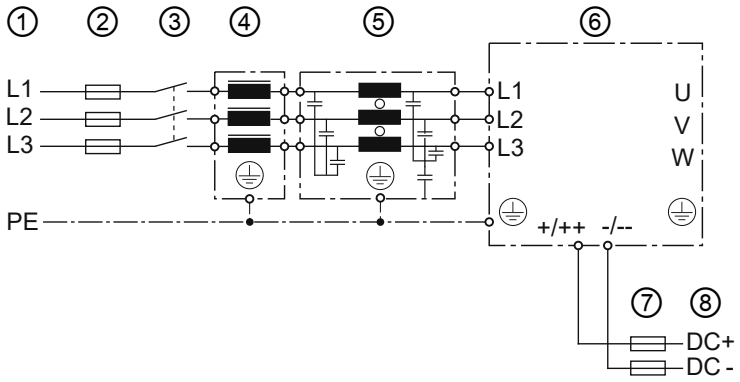

No.	Type	Description	
1	Mains phase	3-phase	
	Mains form	TN, TT	IT
		The rated voltage between one phase conductor and earth potential (or the neutral point in the IT system) must not exceed 300V. (For the IT system, a short-term disconnection must be ensured).	
	Personal protection	RCMA with separator or RCD type B	Insulation monitors
2	Mains fuses	see chapter “Protection of the drive controllers”	
3	Mains contactor	-	
4	Mains choke	see notes in chapter “Filters and chokes”	
5	HF filter for TN-, TT systems	Required for compliance with the limit values in accordance with *EN 61800-3.*	
	HF filter for IT systems		
6	Drive controller	COMBIVERT F6	
7	DC-fuses	See note in chapter „Fusing of the devices”.	
8	DC-supply	DC supply generated by the drive controller for connecting further drive controllers => *„5.3.6 DC-bus connection“*	

Figure 25: Connection of the mains supply 3-phase

5.3.3 DC mains connection

5.3.3.1 Terminal block X1A DC connection



Name	Function	Cross-section for terminal connection	Tightening torque	Max. number of conductors
+	DC terminals	10 mm stud for M10 crimp connector	25 Nm 220 lb-in	2
-				

Figure 26: Terminal block X1A DC connection

5.3.3.2 Connection at DC voltage supply

NOTICE

Destruction of the drive controller!

► Never exchange “+ / ++” and “- / --”!

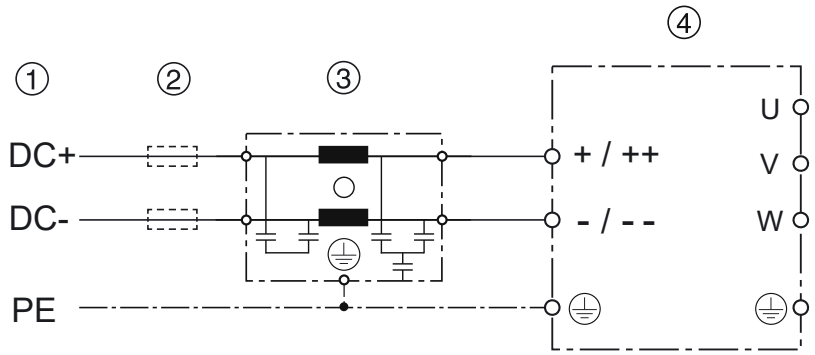

No.	Type	Description
1	DC Power Supply	2-phase
2	DC mains fuses	See note in chapter “Fuse protection for DC-supply”
3	HF-Filter	Required for compliance with the limits according to EN 61800-3.
4	Drive controller	COMBIVERT F6

Figure 27: Connection at DC voltage supply

5.3.4 Connection of the motor

5.3.4.1 Wiring of the motor

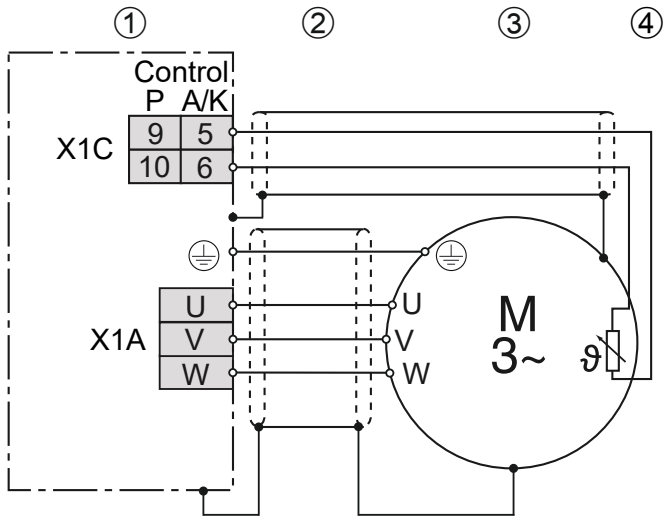

Legend	
1	KEB COMBIVERT
2	Apply motor cable, shielding on both sides over a large surface on the bare metallic frame or mounting plate (remove paint if necessary)
3	Three-phase motor
4	Temperature monitoring (optional) => *Instructions for use "Control circuit"*

Figure 28: Wiring of the motor

5.3.4.2 Terminal block X1A motor connection



Name	Function	Cross-section for terminal connection	Tightening torque	Max. number of conductors
U	Motor connection	10 mm stud for M10 crimp connector	25 Nm 220 lb-in	2
V				
W				

Figure 29: Terminal block X1A motor connection

5.3.4.3 Selection of the motor line

The correct cabling as well as the motor line itself play an important part in case of low power in connection with long motor line lengths. Low-capacitance line (phase/phase < 65 pF / m, phase / screen < 120 pF / m) at the inverter output have the following effects:

- allow major motor line lengths *„Motor cable length and conducted interferences at AC supply“*.
- better EMC properties (reduction of the common-mode output currents to earth)

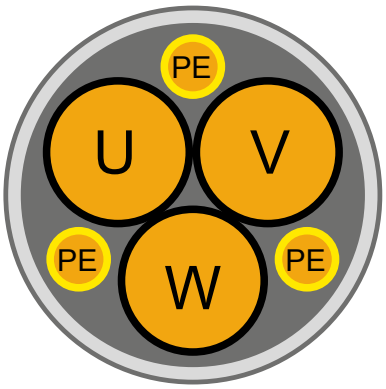

The use of shielded motor lines with symmetrical structure is required for higher motor power (from 30 kW). In these lines the protective earth conductor is tripartite and evenly arranged between the phase lines. A cable without protective earth conductor can be used if local regulations so permit. Then the protective earth conductor must be laid externally. Certain lines also permit the shield for the use as protective earth conductor. For this, observe the details of the line manufacturer!

Figure 30: Symmetrical motor line

5.3.4.4 Motor cable length and conducted interferences at AC supply

The maximum motor cable length is depending on the capacity of the motor cable as well as on the EMC emitted interference. External measures must be taken here (e.g. the use of a line filter).

The cable length can be increased significant by using motor chokes or motor filters. KEB recommends the use of motor chokes or filters for a cable length upto 25 m.

Further information on the motor cable length can be found in the corresponding filter instructions.

5.3.4.5 Motor cable length for parallel operation of motors

The resulting motor cable length for parallel operation of motors, or parallel installation with multiple cables arises from the following formula:

$$\text{Resultant motor cable length} = \left(\sum_{l=1}^{n} \text{Motor cable length}\right) * \sqrt{n\ [\text{Number of motor cable length}]}$$

5.3.4.6 Motor cable cross-section

The motor cable cross-section is dependent

- on the characteristic of the output current (e.g. harmonic content)
- on the real effective value of the motor current
- on the cable length
- on the type of the used cable
- on the ambient conditions such as bundling and temperature

5.3.4.7 Interconnection of the motor

NOTICE

Incorrect behavior of the motor!

► The connecting-up instructions of the motor manufacturer are always generally valid!

NOTICE

Protect motor against voltage peaks!

► Drive controllers switch at the output with high dV/dt. Voltage peaks that endanger the insulation system at the motor can occur especially in case of long motor cables (>15 m). A motor choke, a dV/dt-filter or sine-wave filter can be used to protect the motor with regard to the operating mode.

5.3.4.8 Connection of the temperature monitoring and brake control (X1C)

A switchable temperature evaluation is implemented in the COMBIVERT.

There are different types for the evaluation available. These are dependending on the control board => *Instruction manual „control board“*.

The desired operating mode can be adjusted via software (dr33). If the evaluation is not required, it must be deactivated via software (parameter pn12 = 7) => *Programming manual.*

X1C	PIN	Name	Description
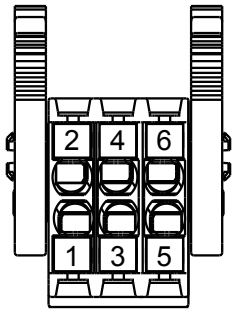	1	BR+	Brake control / output +
	2	BR-	Brake control / output -
	3	reserved	–
	4	reserved	–
	5	TA1	Temperature detection / output +
	6	TA2	Temperature detection / output -

Figure 31: Terminal block X1C for control board APPLICATION and COMPACT

X1C	PIN	Name	Description
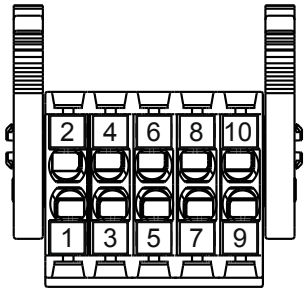	1	BR+	Brake control / output +
	2	BR-	Brake control / output -
	3	0V	For supply of the checkback inputs
	4	24Vout	
	5	DIBR1	Checkback input 1 for brake and relay
	6	DIBR2	Checkback input 2 for brake and relay
	7	reserved	–
	8	reserved	–
	9	TA1	Temperature detection / output +
	10	TA2	Temperature detection / output -

Figure 32: Terminal block X1C for control board PRO

NOTICE

Malfunctions due to incorrect line or laying!

Malfunctions of the control due to capacitive or inductive coupling.

- ► Do not route cables from the motor temperature sensor (also shielded) together with control cables.
- ► Cables from the motor temperature sensor within the motor cables may only be used with double shielding!
- ► The input of the temperature detection has basic isolation.

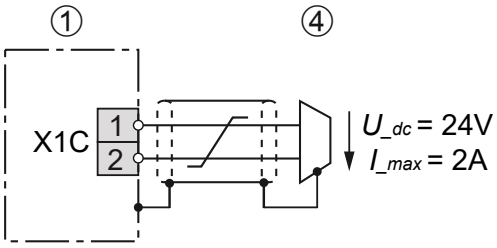

1	COMBIVERT
4	Brake

For control board APPLICATION and COMPACT.

The voltage to the control of a brake is decoupled from the internal voltage supply. The brake works only with external voltage supply.

For control board PRO

The brake can be supplied with both, internal and external voltage. Voltage tolerances and output currents vary for internal and external voltage supply..

Respect the specifications
=> *Instruction manual „control board“*

Figure 33: Connection of the brake control

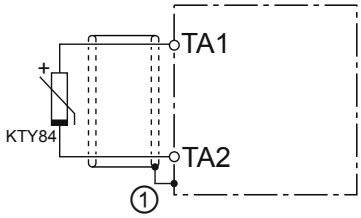

KTY sensors are polarized semiconductors and must be operated in forward direction!
To this connect the anode to TA1 and the cathode to TA2!
Non-observance leads to incorrect measurements in the upper temperature range. A protection of the motor winding is then no longer guaranteed.

1	Connection via shield plate (if not available, place on the mounting plate).

Figure 34: Connection of a KTY sensor

NOTICE

No protection of the motor winding in case of wrong connection.

- ► Operate KTY sensors in forward direction.
- ► KTY sensors may not be combined with other detections.

Further information about the wiring of the temperature monitoring and the brake control have to be observed in the respective control unit manual.

5.3.5 Connection and use of a braking resistor

⚠ CAUTION



Fire risk by using brake resistors!

► The risk of fire can be significantly reduced by using „intrinsically safe braking resistors“ or by using suitable monitoring functions / circuits.

NOTICE

Destruction of the frequency inverter if the vale has fallen below the minimum brake resistance value!

► The minimum brake resistance value must not fall below!
„3.2 Device data of the 400V devices“

⚠ CAUTION



Hot surfaces caused by load of the braking resistor!

Burning of the skin!

► Cover hot surfaces safe-to-touch.

► Before touching, check the surface.

► If necessary, attach warning signs on the system.

5.3.5.1 Terminal block X1A connection braking resistor



Name	Function	Cross-section for terminal connection	Tightening torque	Max. number of conductors
+	Connection for braking resistor (between + and R)	10 mm stud for M10 crimp connector	25 Nm 220 lb-in	2
R				

Figure 35: Terminal block X1A connection braking resistor

On devices with sub-mounted braking resistors there is no electrical connection to the braking transistor at terminal R!

5.3.5.2 Use of non-intrinsically safe braking resistors

⚠ WARNING

Use of non-intrinsically safe braking resistors

Fire or smoke emission in case of overload or error!



- ► Only use braking resistors with temperature sensor.
- ► Evaluate temperature sensor.
- ► Trigger an error at the drive controller (e.g. external input).
- ► Switch off input voltage (e.g. input contactor).
- ► Connection examples for non-intrinsically safe braking resistors
- ► => *Instructions for use "Installation braking resistors“*



Instructions for use "Installation braking resistors“
www.keb.de/fileadmin/media/Manuals/dr/ma_dr_braking-resistors-20116737_en.pdf
Chapter „Connection of a braking resistor with extended temperature monitoring“.

5.3.6 DC-bus connection

The DC link of several drive controllers are coupled in a DC-bus connection. This enables energy to be exchanged between the devices and increases the energy efficiency of the application.

As part of a DC-bus connection, this drive controller can either be supplied via the DC terminals => *„5.3.3 DC mains connection“* or supply other drive controllers via the DC terminals => *„5.3.2 AC mains connection“.*

KEB drive controllers meet the requirements of the EMC product standard *EN IEC 61800-3* for DC power supplies. Due to the large number of possible interconnection options in the DC network, the user is responsible for ensuring the conformity of the overall system.

The following additional safety instructions must be observed when using this drive controller in a DC-bus connection:

- This drive controller may only be operated together with other F6 and S6 drive controllers of the 400V class in a DC-bus connection.
- This drive controller must be installed in an enclosure.
- This drive controller must be protected with fuses at the DC terminals => *„3.2.6.2 Fuse protection of the 400 V units ati DC-supply“.*
- If one fuse in the DC-bus connection blows as a result of a short circuit, all fuses in the DC-bus connection should be replaced due to the risk of prior damage.
- The parameterisation of the input phase failure detection must be adapted => F6 Programming manual.

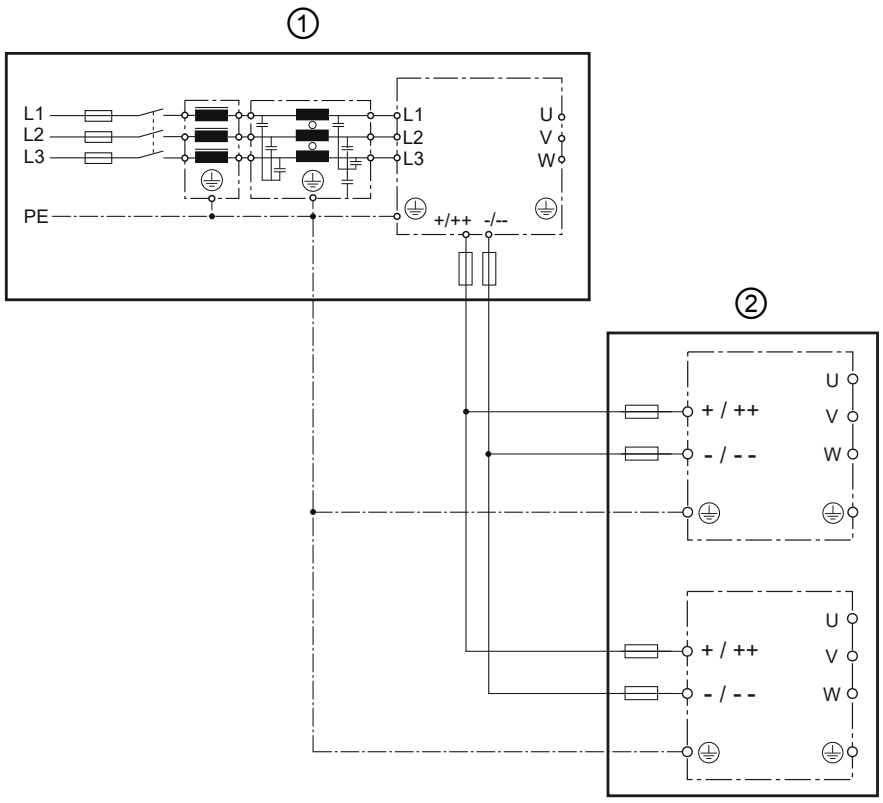

Legend	
1	Drive controller for supplying further drive controllers
2	Other drive controllers connected to the DC-bus connection

Figure 36: DC-bus connection

① *When using this drive controller to supply other drive controllers via the DC terminals, the following must also be observed:*

- The maximum prechargeable total capacity (internal capacity + external capacity) must not be exceeded => *„Table 26: DC link / braking transistor function of the 400 V devices“.*
- The minimum waiting time between two precharging procedures must be observed => *„5.2.1 Connection of the voltage supply“.*
- Drive controllers supplied via the DC terminals must not be loaded during precharging.
- Overloading of the rectifier must be prevented by the user => *„3.2.4 Overview of rectifier data for 400 V devices“.*

② *When supplying this drive controller via the DC terminals, the following must also be observed:*

- The drive controller must be pre-charged by the supplying drive controller or an external pre-charging module.

5.3.7 External heat sink fan supply (FAN)

The external heat sink fan supply is only available for air-cooled devices.

The control board and heat sink fans should be powered by separate external voltage sources.

In the event of a fault in the heat sink fans, this provides an uninterrupted supply of power to the control system.

Avoid overheating errors by adjusting the fan voltage.

The voltage supply across the supply line must be taken into account when supplying power to the fans.

The voltage at the FAN terminal must be 24V at full fan speed. KEB recommends a voltage source with adjustable output voltage.

NOTICE

Use of unsuitable voltage sources!

Electric shock!

- ► Only voltage sources (PELV) according to VDE 0100 permitted.
- ► Ensure that the overvoltage category of the voltage supply is sufficient.
- ► Observe the tripping characteristics of the fuses when selecting the voltage source for the heat sink fan supply.

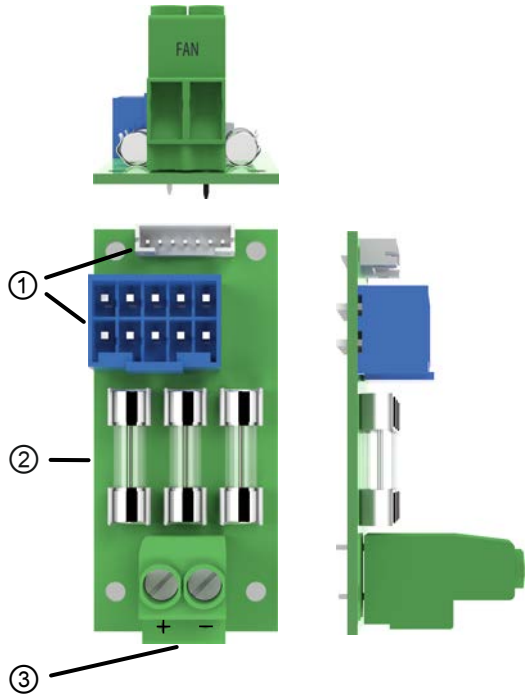

Legend		
1		Only internal use
2		Fuse: F200, F201, F202 SIBA Ltd. No. 179120.4 (4A fuse)
3		FAN: Connection +/- for external 24 V voltage supply
Fuse(s)	*I* / A	4 (Type gG)
Max. number of conductors		2
Supply voltage	U_{FAN_dc} / V	24 ± 5 %
Rated input current	I_{FAN_dc} / A	8
Peak current	I_{FAN_Peak} / A	12
Tightening torque	F_N / Nm	0.5...0.6
	F_N / lb inch	4.5...5.3
Connection cross section	for IEC *A* / mm²	0.2...4 (Flexible cable with wire end ferrule) 1.5 max. (with 2 conductors)
	for UL *A* / AWG	24...10 (UL: flexible cable without wire end ferrule) 14 max. (with 2 conductors)

Figure 37: External heat sink fan supply

5.4 Accessories

5.4.1 Filters and chokes

Voltage class	Drive controller size	HF filter	Mains choke 50 Hz / 4 % U_k
400 V	25	• 27E6T60-3000 • 26E4T60-1001	25Z1B04-1000
	26	• 27E6T60-3000 • 26E4T60-1001	26Z1B04-1000
	27	• 27E6T60-3000 • 28E4T60-1001	27Z1B04-1000
	28	• 28E4T60-1001	28Z1B04-1000

Table 32: Filters and chokes

NOTICE

Overheating of the back mount filters!

► The use of sub-mounted filters for drive controllers with the material number xxF6xxx-xxx9 (fluid cooler water, built-in version, sub-mounted braking resistors) leads to overheating and is not permitted !

The specified filters and chokes are designed for rated operation.

5.4.2 Seal for IP54-ready devices

Name	Material number
Flat seal IP54	70F6T45-0001

Table 33: Seal for IP54-ready devices

5.4.3 Side-mounted braking resistors

Technical data and design about non-intrinsically safe braking resistors

www.keb.de/fileadmin/media/Manuals/dr/ma_dr_braking-resistors-20116737_de.pdf

6 Operation of Liquid-Cooled Devices

6.1 Water-cooled devices

The use of water-cooled KEB COMBIVERT drive controller is offered, because there are process-caused coolants available with some applications. However, the following instructions must be observed.

6.1.1 Heat sink and operating pressure

Design system	Material	max. operating pressure	Connection
Aluminium heat sink with stainless steel tubes	Stainless steel 1.4404	10 bar	*=> „6.1.4 Connection of the cooling system“*

NOTICE

Deformation of the heat sink!

- ► In order to avoid a deformation of the heat sink and the damages thereby, the indicated maximum operating pressure may not be exceeded briefly also by pressure peaks.
- ► Observe the Pressure Equipment Directive 2014/68/EU!

6.1.2 Materials in the cooling circuit

For the screw connections and also for the metallic articles in the cooling circuit which are in contact with the coolant (electrolyte) a material is to be selected, which forms a small voltage difference to the heat sink in order to avoid contact corrosion and/or pitting corrosion (electro-chemical voltage series, see the following table). The specific case of application must be checked by the customer in tuning of the complete cooling circuit and must be classified according to the used materials. With hoses and seals take care that halogen-free materials are used.

A liability for occuring damages by wrongly used materials and from this resulting corrosion cannot be taken over!

Material	formed ion	Standard potential	Material	formed ion	Standard potential
Lithium	Li+	-3.04 V	Nickel	Ni2+	-0.25 V
Potassium	K+	-2.93 V	Tin	Sn2+	-0.14 V
Calcium	Ca2+	-2.87 V	Lead	Pb3+	-0.13 V
Sodium	Na+	-2.71 V	Iron	Fe3+	-0.037 V
Magnesium	Mg2+	-2.38 V	Hydrogen	2H+	0.00 V
Titan	Ti2+	-1.75 V	**Stainless steel (1.4404)**	**various**	**0.2...0.4 V**
Aluminium	Al3+	-1.67 V	Copper	Cu2+	0.34 V
Manganese	Mn2+	-1.05 V	Carbon	C2+	0.74 V
Zinc	Zn2+	-0.76 V	Silver	Ag+	0.80 V

continued on the next page

Material	formed ion	Standard potential	Material	formed ion	Standard potential
Chrome	Cr3+	-0.71 V	Platinum	Pt2+	1.20 V
Iron	Fe2+	-0.44 V	Gold	Au3+	1.42 V
Cadmium	Cd2+	-0.40 V	Gold	Au+	1.69 V
Cobald	Co2+	-0.28 V			

Table 34: Electrochemical series / standard potentials against hydrogen

6.1.3 Requirements for the coolant

The requirements for the coolant depend on the ambient conditions as well as the used cooling system.

General requirements for the coolant:

Requirement	Description
Standards	Corrosion protection according to *EN 12502-1...5*, water treatment and use of materials in cooling systems according to *VGB S 455 P*.
VGB Cooling water directive	The VGB cooling water directive (*VGB S 455 P*) contains instructions about common process technology of the cooling. Particulary the interactions between cooling water and components of the cooling system are described.
Abrasive substances	Abrasive substances as used in abrasive (quartz sand), clogging the cooling circuit.
Hard water	Cooling water may not cause scale deposits or loose excretions. The total hardness should be between 7...20 °dH, the carbon hardness at 3...10 °dH.
Soft water	Soft water (<7°dH) corrodes the material.
Frost protection	An appropriate antifreeze must be used for applications when the heat sink or the coolant is exposed temperatures below zero. Use only products of one manufacturer for a better compatibility with other additives. KEB recommends the antifreeze Antifrogen N from Clariant with a maximum volume content of 52 %.
Corrosion protection	Additives can be used as corrosion protection. In connection with frost protection the antifreeze must have a concentration of 20…25 Vol %, in order to avoid a change of the additives. Alternatively, an antifreeze / glycol with a concentration of 20% ... max. vol 52% can be used. If antifreeze is used, the water does not need to be provided with additional additives.

Table 35: Requirements for the coolant

Special requirements for open and half-open cooling systems:

Requirement	Description
Impurities	Mechanical impurities in half-open cooling systems can be counteracted when appropriate water filters are used.
Salt concentration	The salt content can increase through evaporation at half-open systems. Thus the water is more corrosive. Adding of fresh water and removing of process water works against.
Algae and myxobacteria	Algae and myxobacteria can arise caused by increased water temperature and contact with atmospheric oxygen. The algae and myxobacteria clog the filters and obstruct the water-flow. Biocide containing additives can avoid this. Especially at longer OFF periods of the cooling circuit preventive maintenance is necessary.
Organic materials	The contamination with organic materials must be kept as small as possible, because separate slime can be caused by this.

Table 36: Special requirements for open and half-open cooling systems

Damages at the device which are caused by clogged, corroded heat sinks or other obvious operating errors, leads to the loss of the warranty claims.

6.1.4 Connection of the cooling system

The connection to the cooling system can occur as closed or open cooling circuit. The connection to a closed cycle cooling circuit is recommended, because the danger of contamination of coolant is very small. Preferably also a monitoring of the pH value of the coolant should be installed.

Pay attention to a corresponding conductor cross-section at required equipotential bonding in order to avoid electro-chemical procedures.

=> „6.1.2 Materials in the cooling circuit“

Other elements in the cooling circuit such as pumps, shut-off valves, ventilation etc. must be attached according to the cooling system and the local conditions.

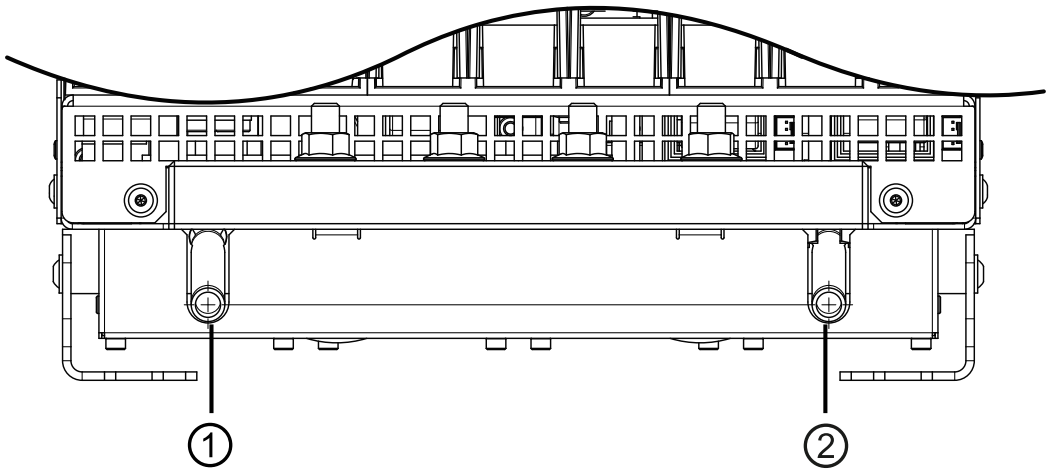

No.	Connection	Type
1	Flow	Open pipe ends for the connection of the cooling system Pipe diameter outside: 12 mm
2	Return flow	

Figure 38: Open pipe ends for the connection of the cooling system

For the connection of the cooling system KEB recommends the use of functional nuts, e.g. from the manufacturer "Parker", type FMxxL71 (xx = pipe diameter).

To monitor the volume flow in the cooling system KEB recommends the use of a volume flow monitor.

6.1.5 Coolant temperature

The flow temperature should be selected depending on the volume flow so that the heat sink temperature is always 10 K below the overtemperature level (OH) during rated operation. This avoids sporadic shutdown.

The maximum heat sink temperature can be found in chapter => *„3.3.1 Switching frequency and temperature“*.

Device size		**25**	**26**	**27**	**28**
Maximum system temperature	t_{max} / °C	*„3.3.1 Switching frequency and temperature“*			
ΔT flow/return	ΔT / K	3...7	3...7	3...7	3...7
Flow temperature tyypically	t_{in_typ} / °C	25	25	25	25
Flow temperautre maximum	t_{in_max} / °C	40	40	40	40
Coolant fill volume	V / l	0.2	0.2	0.2	0.2
Volume flow	Q / l/min	*„6.1.9 Volume flow and temperature difference“*			
Pressure loss	Δ_{pv} / bar	*„6.1.10 Typical pressure drop of the heat sink“*			
Max. permissible operating pressure	p_{max} / bar	10	10	10	10

Table 37: Coolant temperature

6.1.5.1 Supply of temper coolant

- The supply of optimally tempered coolant is possible by using heaters in the cooling circuit to control the coolant temperature.
- The following dew point table shows the coolant inlet temperature depending on the ambient temperature and air humidity.

Air humidity / % / **Ambient temperature / °C**	**10**	**20**	**30**	**40**	**50**	**60**	**70**	**80**	**90**
-10	-34	-26	-22	-19	-17	-15	-13	-11	-11
-5	-29	-22	-18	-15	-13	-11	-8	-7	-6
0	-26	-19	-14	-11	-8	-6	-4	-3	-2
5	-23	-15	-11	-7	-5	-2	0	2	3
10	-19	-11	-7	-3	0	1	4	6	8
15	-18	-7	-3	1	4	7	9	11	13
20	-12	-4	1	5	9	12	14	16	18
25	-8	0	5	10	13	16	19	21	23
30	-6	3	10	14	18	21	24	26	28
35	-2	8	14	18	22	25	28	31	33
40	1	11	18	22	27	31	33	36	38
45	4	15	22	27	32	36	38	41	43
	Coolant inlet temperature / °C								

Table 38: Dew point table



Information on coolant management is given in the following document
www.keb.de/fileadmin/media/Techinfo/dr/an/ti_dr_an-liquid-cooling-00004_en.pdf

6.1.6 Condensation

A temperature difference between drive converter and ambient temperature can lead to condensation at high humidity.
Moisture condensation is dangerous for the drive converter. The drive converter can be destroyed through occuring short-circuits.

NOTICE

Destruction of the drive converter due to short circuit!

► Avoid any condensation.

NOTICE

Destruction of the drive converter due to condensation!

► Use only NC valves!

6.1.7 Storage

NOTICE

Destruction of the heat sink at storage / transport of water-cooled devices!

Observe the following points when storing water-cooled devices:

► Completely empty the cooling circuit

► Blow out the cooling circuit with compressed air

6.1.8 Permissible volume flow with water cooling

The volume flow of the following table must be observed.

Permissible volume flow		
Min. volume flow	Q_{min} / l/min	6
Max. volume flow	Q_{max} / l/min	20

Table 39: Permissible volume flow with water cooling

The volume flow depends on the total power dissipation.
=> „6.1.9 Volume flow and temperature difference“

NOTICE

Destruction of the heat sink due to erosion!

► The maximum permissible volume flow must not be exceeded.

6.1.9 Volume flow and temperature difference

Volume flow depending on the total power dissipation and temperature difference between flow and return flow.

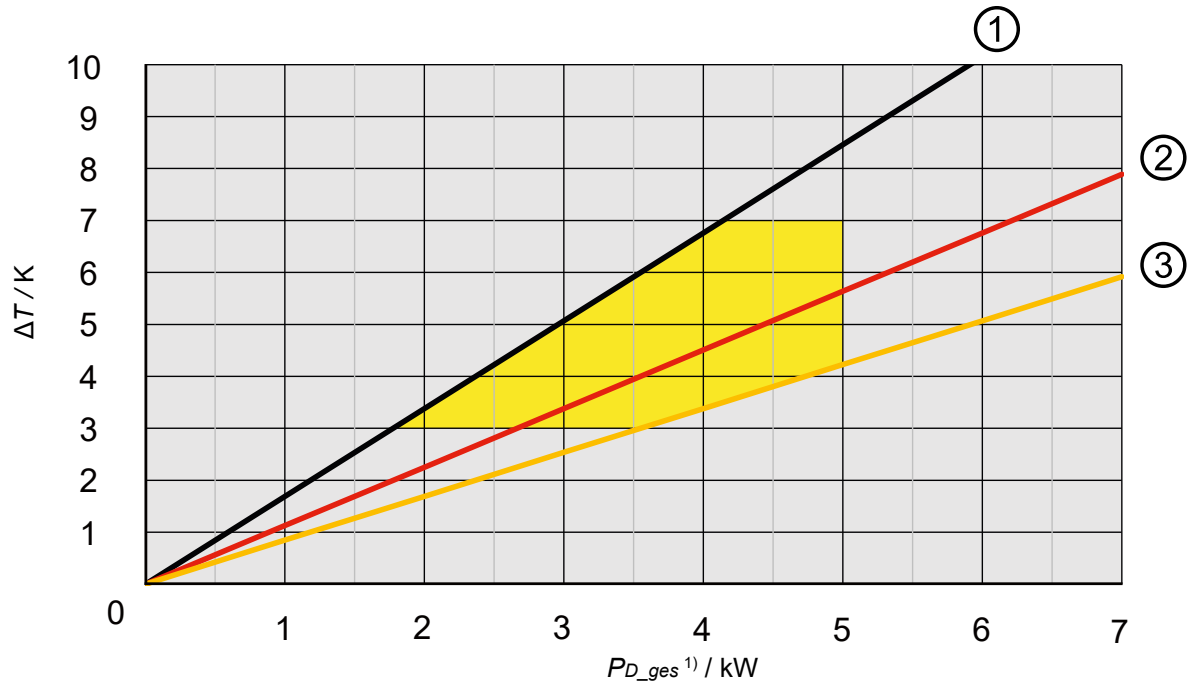

Legend	
	Work area
1	10 l/min
2	15 l/min
3	20 l/min

Figure 39: Volume flow depending on the total power dissipation PD_ges and temperature difference with water-glycol mixture

1) *P_{D_ges} can be higher than the power dissipation PD during rated operation due to overload, higher switching frequency or sub-mounted braking resistors.*

6.1.10 Typical pressure drop of the heat sink

- The curve characteristic shown below is valid for 25 °C flow temperature and a glycol content of 52 %.
- If higher flow temperatures are used, the pressure drop in the system decreases.
- This also applies to cooling media such as water or another glycol mixture.
- A glycol mixture from Clariant in a ratio of 52 % or 33 % is recommended.

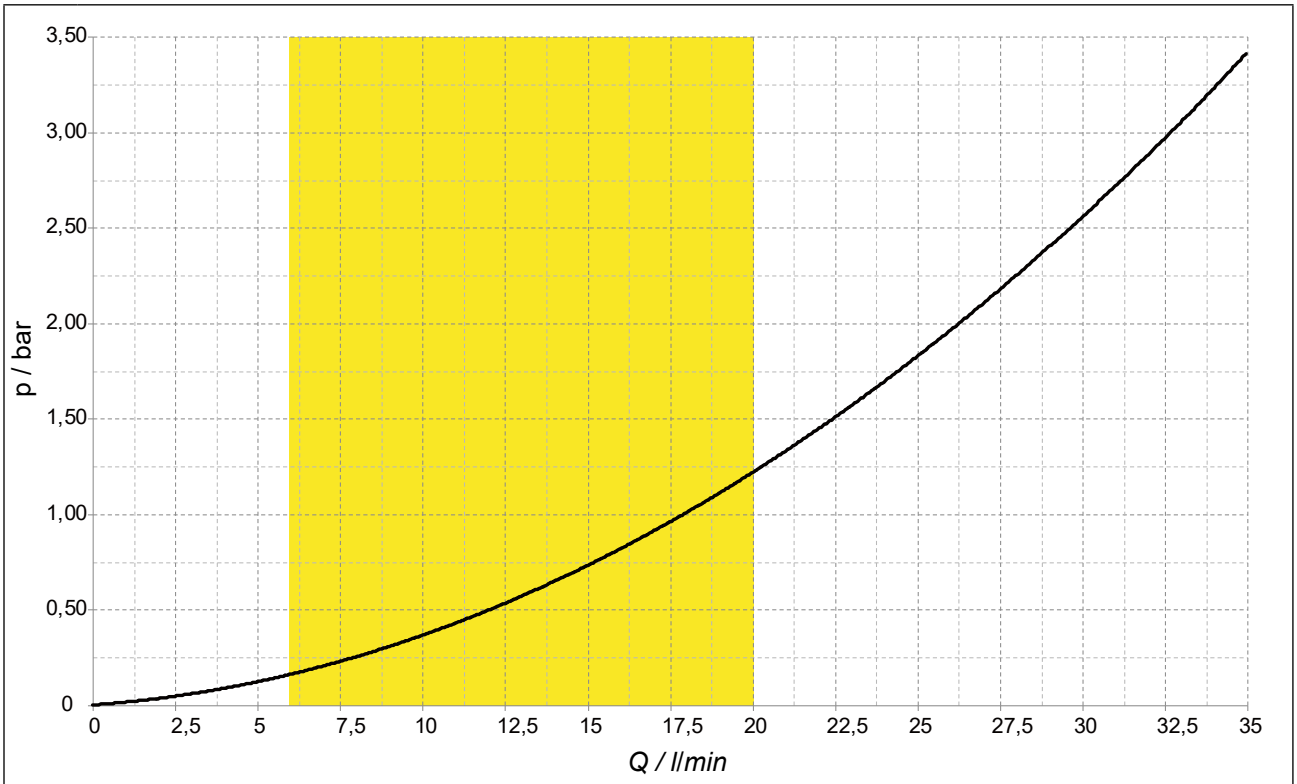

Legend	
	Work area

Figure 40: Typical pressure drop depending on the volume flow

6.2 With high-performance heat sink

Water-cooled KEB COMBIVERT drive controller are ideal for applications in which cooling fluid is required due to the nature of the process. However, the following instructions must be observed when using the product.

6.2.1 Heat sinks and operating pressure

Design system	Material	Max. operating pressure	Connection
aluminium heat sink	Aluminium -1.67 V	10 bar	=> *„6.2.4 Connection of the high-performance heat sink“*

NOTICE

Deformation of the heat sink!

- ► To prevent deformation of the heat sink and the associated consequential damage, the specified maximum operating pressure must not be exceeded, even for short periods, including during pressure peaks.
- ► The Pressure Equipment Directive 2014/68/EU on pressure equipment must be observed!

6.2.2 Materials in the cooling circuit

For screw connections and metal objects in the cooling circuit that come into contact with the coolant (electrolyte), a material should be selected that has a low voltage difference to the heat sink so that no contact corrosion and/or pitting occurs (electrochemical series, see table below). The specific application must be checked by the customer in coordination with the entire cooling circuit and classified accordingly with regard to the suitability of the materials used. When using hoses and seals, care must be taken to ensure that halogen-free materials are used.

We cannot accept liability for damage caused by incorrectly used materials and resulting corrosion!

Material	formed ion	Standard potential	Material	formed ion	Standard potential
Lithium	Li+	-3.04 V	Nickel	Ni2+	-0.25 V
Potassium	K+	-2.93 V	Tin	Sn2+	-0.14 V
Calcium	Ca2+	-2.87 V	Lead	Pb3+	-0.13 V
Sodium	Na+	-2.71 V	Iron	Fe3+	-0.037 V
Magnesium	Mg2+	-2.38 V	Hydrogen	2H+	0 V
Titanium	Ti2+	-1.75 V	**Stainless steel 1.4404 ( )**	**various**	**0.2...0.4 V**
Aluminium	**Al3+**	**-1.67 V**	Copper	Cu2+	0.34 V
Manganese	Mn2+	-1.05 V	Carbon	C2+	0.74 V
Zinc	Zn2+	-0.76 V	Silver	Ag+	0.8 V

continued on the next page

Material	formed ion	Standard potential	Material	formed ion	Standard potential
Chrome	Cr3+	-0.71 V	Platinum	Pt2+	1.2 V
Iron	Fe2+	-0.44 V	Gold	Au3+	1.42 V
Cadmium	Cd2+	-0.4 V	Gold	Au+	1.69 V
Cobalt	Co2+	-0.28 V			

Table 40: Electrochemical series / Standard potentials against hydrogen

6.2.3 Requirements for coolant for high-performance heat sinks

The requirements for the coolant depend on the environmental conditions and the cooling system used.

General requirements for the coolant:

Requirement	Description
Standards	Corrosion protection in accordance with *DIN EN 12502-1...5*, water treatment and use of materials in cooling systems according to *VGB S 455 P*.
VGB Cooling water guideline	The VGB Cooling Water Guideline (*VGB S 455 P*) contains information on common cooling process technologies. In particular, the interactions between the cooling water and the components of the cooling system are described.
Abrasives	Abrasive substances, such as those used in scouring agents (quartz sand), clog the cooling circuit.
Hard water	Cooling water must not cause water scale deposits or loose deposits. The total hardness should be between 7 and 20 °dH, and the carbon hardness between 3 and 10 °dH.
Soft water	Soft water (<7°dH) attacks the materials.
Frost protection	For applications in which the heat sink or cooling fluid is exposed to temperatures below 0°C, an appropriate antifreeze agent must be used. For better compatibility with other additives, it is best to use products from one manufacturer. KEB recommends the antifreeze Antifrogen N from Clariant with a maximum volume proportion of 52%.
Corrosion protection	Additives can be used as corrosion protection. In combination with antifreeze, the antifreeze must have a concentration of 20–25% by volume to prevent any change in the additives. Alternatively, antifreeze/glycol with a concentration of 20% ... max. vol. 52% can be used. If antifreeze is used, there is no need to add any additional additives to the water.

Table 41: Requirements for the coolant

Special requirements for open and semi-open cooling systems:

Requirement	Description
Impurities	Mechanical impurities in semi-open cooling systems can be counteracted by using appropriate water filters.
Salt concentration	In semi-open systems, evaporation can cause the salt content to rise. This makes the water more corrosive. Adding fresh water and removing service water counteracts this.
Algae and myxobacteria	Algae and myxobacteria can form due to the increased water temperature and contact with atmospheric oxygen. These clog the filters and thus impede the flow of water. Additives containing biocides can prevent this. This should be prevented, especially during prolonged standstill of the cooling circuit.
Organic substances	Contamination with organic substances must be kept to a minimum, as this causes sludge deposits to form.

Table 42: Special requirements for open and semi-open cooling systems:

NOTICE

Loss of warranty claims!

► Damage to the device resulting from clogged, corroded heat sinks or other obvious misuse will void the warranty claims.

6.2.4 Connection of the high-performance heat sink

The connection to the cooling system can be made as a closed or open cooling circuit. Connection to a closed cooling circuit is recommended, as the danger of contamination of the coolant is very low. Preferably, a monitoring system for the pH value of the coolant should also be installed.

When performing the necessary potential equalisation, ensure that the conductor cross-section is appropriate in order to minimise electrochemical processes.

=> *„6.2.2 Materials in the cooling circuit“*

Additional elements in the cooling circuit, such as pumps, shut-off valves, ventilation, etc., must be added in accordance with the cooling system and circumstance.

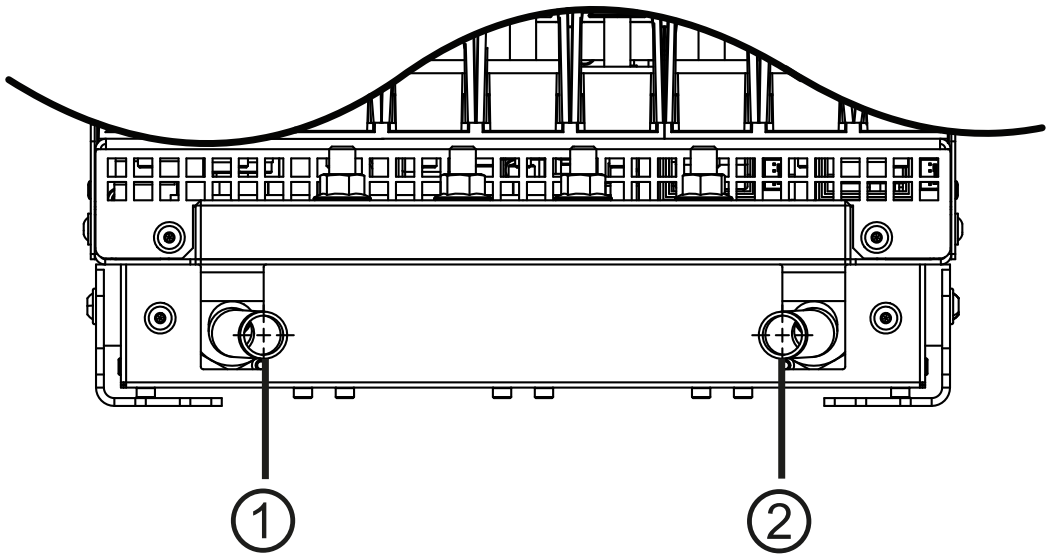

No.	Connection	Type
1	Flow	Open pipe ends for the connection of the cooling system
2	Return flow	Pipe diameter outside: 18 mm

Figure 41: Open pipe ends for the connection of the cooling system

For the connection of the cooling system KEB recommends the use of functional nuts, e.g. from the manufacturer "Parker", type FMxxL71 (xx = pipe diameter).

The recommended tightening torque is 80Nm.

To monitor the volume flow in the cooling system KEB recommends the use of a volume flow monitor.

6.2.5 Coolant temperature

The flow temperature should be selected depending on the volume flow so that the heat sink temperature is always 10 K below the overtemperature level (OH) during rated operation. This avoids sporadic shutdown.

The maximum heat sink temperature can be found in chapter => *„3.3.1 Switching frequency and temperature“*.

Device size		**25**	**26**	**27**	**28**
Maximum system temperature	t_{max} / °C	*„3.3.1 Switching frequency and temperature“*			
ΔT flow/return	ΔT / K	2...5	2...5	2...5	2...5
Flow temperature typically	t_{in_typ} / °C	25	25	25	25
Flow temperautre maximum	t_{in_max} / °C	55	55	55	55
Coolant fill volume	V / l	0.2	0.2	0.2	0.2
Volume flow	Q / l/min	*„6.2.9 Volume flow and temperature difference for high-performance heat sink“*			
Pressure loss	Δ_{pv} / bar	*„6.2.10 Typical pressure drop of the high-performance heat sink“*			
Max. permissible operating pressure	p_{max} / bar	10	10	10	10

Table 43: Coolant temperature

6.2.5.1 Supply of temper coolant

- The supply of optimally tempered coolant is possible by using heaters in the cooling circuit to control the coolant temperature.
- The following dew point table shows the coolant inlet temperature depending on the ambient temperature and air humidity.

Air humidity / % / **Ambient temperature / °C**	**10**	**20**	**30**	**40**	**50**	**60**	**70**	**80**	**90**
-10	-34	-26	-22	-19	-17	-15	-13	-11	-11
-5	-29	-22	-18	-15	-13	-11	-8	-7	-6
0	-26	-19	-14	-11	-8	-6	-4	-3	-2
5	-23	-15	-11	-7	-5	-2	0	2	3
10	-19	-11	-7	-3	0	1	4	6	8
15	-18	-7	-3	1	4	7	9	11	13
20	-12	-4	1	5	9	12	14	16	18
25	-8	0	5	10	13	16	19	21	23
30	-6	3	10	14	18	21	24	26	28
35	-2	8	14	18	22	25	28	31	33
40	1	11	18	22	27	31	33	36	38
45	4	15	22	27	32	36	38	41	43
	Coolant inlet temperature / °C								

Table 44: Dew point table

Information on coolant management is given in the following document
www.keb.de/fileadmin/media/Techinfo/dr/an/ti_dr_an-liquid-cooling-00004_en.pdf

6.2.6 Condensation

A temperature difference between drive converter and ambient temperature can lead to condensation at high humidity.

Moisture condensation is dangerous for the drive converter. The drive converter can be destroyed through occuring short-circuits.

NOTICE

Destruction of the drive converter due to short circuit!

► Avoid any condensation.

NOTICE

Destruction of the drive converter due to condensation!

► Use only NC valves!

6.2.7 Storage

NOTICE

Destruction of the heat sink at storage / transport of water-cooled devices!

Observe the following points when storing water-cooled devices:

► Completely empty the cooling circuit

► Blow out the cooling circuit with compressed air

6.2.8 Permissible volume flow for high-performance heat sinks

The volume flow of the following table must be observed.

Permissible volume flow		
Min. volume flow	Q_{min} / l/min	20
Max. volume flow	Q_{max} / l/min	30

Table 45: Permissible volume flow with water cooling

The volume flow depends on the total power dissipation.
=> „6.2.9 Volume flow and temperature difference for high-performance heat sink“

NOTICE

Destruction of the heat sink due to erosion!

► The maximum permissible volume flow must not be exceeded.

6.2.9 Volume flow and temperature difference for high-performance heat sink

Volume flow depending on the total power dissipation and temperature difference between flow and return flow.

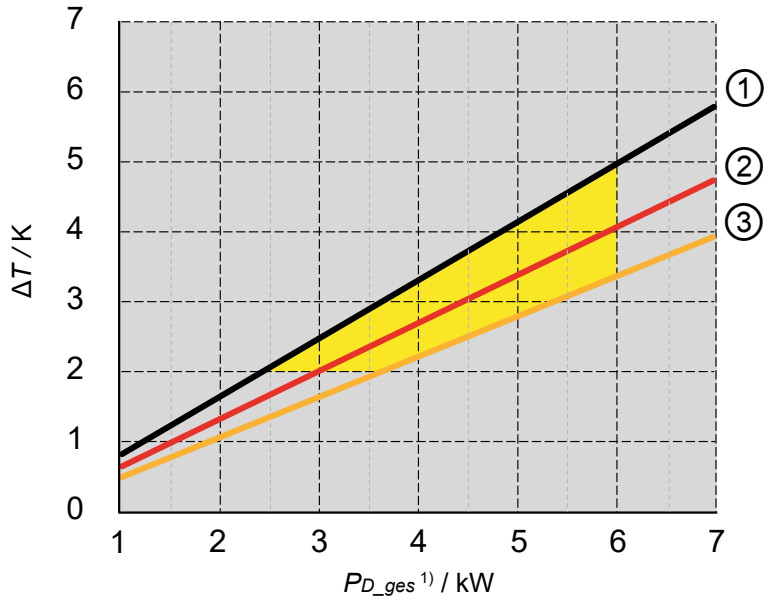

Legend	
	Work area
1	20 l/min
2	25 l/min
3	30 l/min

Figure 42: Volume flow depending on the total power dissipation PD_ges and temperature difference with water-glycol mixture

1) *P_{D_ges} can be higher than the power dissipation PD during rated operation due to overload, higher switching frequency or sub-mounted braking resistors.*

6.2.10 Typical pressure drop of the high-performance heat sink

- The curve characteristic shown below is valid for 25 °C flow temperature and a glycol content of 52 %.
- If higher flow temperatures are used, the pressure drop in the system decreases.
- This also applies to cooling media such as water or another glycol mixture.
- A glycol mixture from Clariant in a ratio of 52 % or 33 % is recommended.

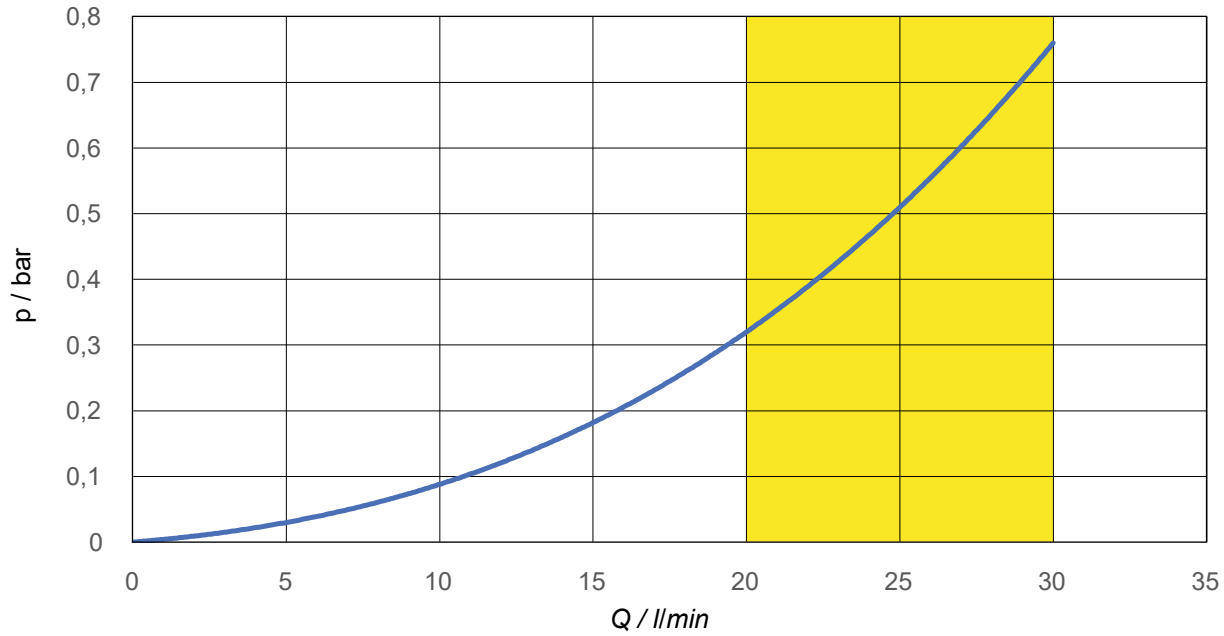

Legend	
	Work area

Figure 43: Typical pressure drop depending on the volume flow

7 Approvals and certifications

7.1 CE-Marking

The drive controller marked with a CE logo comply with the requirements specified by European Union guidelines. The CE Declaration of Conformity is available on the Internet at www.keb-automation.com/de/suche .

For further information regarding the CE declarations of conformity
=> *„7.4 Further informations and documentation“*

7.2 Maritime version

The operating temperature range covers +5°C to +55°C (ambient) as the maritime type testing was successfully performed across the range of +5°C to +70°C.

Maritime versions of drive controller can be identified by the following nameplate.

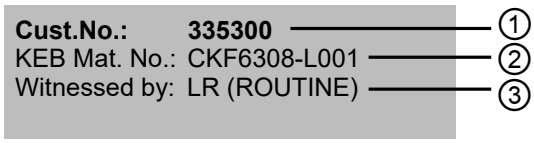

Legend	
1	Optional customer number
2	Customer-specific material number
3	If applicable, a maritime classification society that certifies routine inspections

Figure 44: Nameplate for maritime versions of drive controller

When the ambient temperature reaches +45°C or higher, the power dissipation must be reduced.

Power dissipation can be reduced through the following measures, among others.:

- Reduce the output power by 5% per 1 K.
- A reduction in switching frequency.
- A reduction in the load at the control card interface.

The user must ensure that the internal temperature of the product does not exceed +70 °C (maximum permissible internal temperature).

If the interior temperature exceeds +70 °C, the error message “Error! Interior Overheating” is displayed.

7.3 UL certification

c UL us	Acceptance according to UL is marked at KEB drive converters with the adjacent logo on the nameplate.	UL file number E167544

To be conform according to UL for use on the North American and Canadian Market the following additionally instructions must be observed (original text of the UL-File):

- All models:
  Maximum Surrounding Air Temperature: 45°C
- Use 75°C Copper Conductors Only

  This marking is only applicable for all power field wiring terminals.
- Control Circuit Overcurrent Protection Required
- External Break resistor ratings and duty cycle:
  - Duty cycle 50%
  - Max. 60 sec on-time (60 sec off-time)
- Sub-mounted brake resistor ratings and duty cycle
  - Duty cycle 0.75%
  - Max. 0.9 sec on-time / 119.1 sec off-time
- For the DC bus terminals and the mains/motor terminals, the installation instructions or user maintenance manual shall identify any accessible part at voltages greater than DVC A, and shall describe insulation and separation provisions required for protection.
- All models: „Suitable For Use On A Circuit Capable Of Delivering Not More Than 18000 rms Symmetrical Amperes, 480 Volts Maximum when protected by Class J Fuses, see instruction manual for Branch Circuit Protection details.”

  All models: „Suitable For Use On A Circuit Capable Of Delivering Not More Than 100,000 rms Symmetrical Amperes, 480 Volts Maximum when protected by Semiconductor Fuses by SIBA, Type 20 610 32.xxx, or by Bussmann, Type 170M4xxx or by Littelfuse, Type PSR030yy, see instruction manual for Branch Circuit Protection details.”
- Integral solid state short circuit protection does not provide branch circuit protection. Branch circuit protection must be provided in accordance with the Manufacturer Instructions, National Electrical Code and any additional local codes.

  CSA: For Canada:

  Integral solid state short circuit protection does not provide branch circuit protection. Branch circuit protection must be provided in accordance with the Canadian Electrical Code, Part I.

  LA PROTECTION INTÉGRÉE CONTRE LES COURTSCIRCUITS N‘ASSURE PAS LA PROTECTION DE LA DÉRIVATION. LA PROTECTION DE LA DÉRIVATION DOIT ÊTRE EXÉCUTÉE CONFORMÉMENT AU CODE CANADIEN DE L‘ÉLECTRICITÉ, PREMIÈRE PARTIE.
- For Use in a Pollution Degree 2 environment

  For installations according to Canadian National Standard C22.2 No. 274-13:

  For use in Pollution Degree 2 and Overvoltage Category III environments only

- WARNING – The opening of the branch circuit protective device may be an indication that a fault current has been interrupted. To reduce the risk of fire or electrical shock, current-carrying parts and other components of the controller should be examined and replaced if damaged. If burnout of the current element of an overload relay occurs, the complete overload relay must be replaced."

  CSA: For Canada:

  "ATTENTION - LE DÉCLENCHEMENT DU DISPOSITIF DE PROTECTION DU CIRCUIT DE DÉRIVATION PEUT ÊTRE DÛ À UNE COUPURE QUI RÉSULTE D'UN COURANT DE DÉFAUT. POUR LIMITER LE RISQUE D'INCENDIE OU DE CHOC ÉLECTRIQUE, EXAMINER LES PIÈCES PORTEUSES DE COURANT ET LES AUTRES ÉLÉMENTS DU CONTRÔLEUR ET LES REMPLACER S'ILS SONT ENDOMMAGÉS. EN CAS DE GRILLAGE DE L'ÉLÉMENT TRAVERSÉ PAR LE COURANT DANS UN RELAIS DE SURCHARGE, LE RELAIS TOUT ENTIER DOIT ÊTRE REMPLACÉ.
- For liquid cooled devices:
  - Maximum working pressure: 10 bar (145 psi)
  - Max. inlet liquid temperature: +55°C
  - Min. liquid flow rate: 6 l/min
  - Water or a mixture of water with a maximum of 52% monoethylene glycol
- For high performance:
  - Maximum working pressure: 10 bar (145 psi)
  - Max. inlet liquid temperature: +55°C
  - Min. liquid flow rate: 20 l/min
  - Water or a mixture of water with a maximum of 52% monoethylene glycol

7.4 Further informations and documentation

You find supplementary manuals and instructions for the download under
www.keb-automation.com/search

General instructions
- EMC and safety instructions
- Manuals for additional control boards, safety modules, fieldbus modules, etc.

Instruction and information for construction and development
- Input fuses in accordance with UL
- Programming manual for control and power unit
- Motor configurator to select the appropriate drive controller and to create downloads for parameterizing the drive controller

Approvals and approbations
- Declaration of conformity CE
- TÜV certificate
- FS certification

Other markings and approvals not listed here are identified by a corresponding logo on the rating plate or device, if applicable. The corresponding certificates are available on our website.

Others
- COMBIVIS, the software for comfortable parameterization of drive controllers via PC (available per download)
- EPLAN drawings

8 Revision History

Version	Date	Description
00	2019-11	Creation of the pre-series version
01	2020-11	Extension of the technical data, type code adapted
02	2020-02	Inclusion of devices with sub-mounted braking resistors
03	2022-06	New technical drawings, new type code, inclusion of UL certification, Editorial changes.
04	2024-08	Creation of the series version, DC-Ready Units included. Part codel, Norms, glossary, pictures updated. Editorial changes
05	2025-01	Changing of temperature thresholds.
06	2025-07	Inclusion of high-performance heat sinks.
07	2025-10	Device size 25 (fluid cooler water) added, UL text updated, editorial changes.
08	2026-01	Editorial changes, description of conducted interference updated.
09	2026-05	Description for the maritime version added
10	2026-11	Editorial changes; the type code has been updated; the descriptions for ‘Connection of the cooling system’ and ‘Condensation’ have been revised.

Glossary

0V	Earth-potential-free common point
1ph	1-phase mains
3ph	3-phase mains
AC	AC current or voltage
AFE	From 07/2019 AIC replaces the previous name AFE
AFE filter	From 07/2019 AIC filter replaces the previous name AFE filter
AIC	Active Infeed Converter
AIC filter	Filter for Active Infeed Converter
Application	The application is the intended use of the KEB product
ASCL	Asynchronous sensorless closed loop
Auto motor ident.	Automatically motor identification; calibration of resistance and inductance
AWG	American wire gauge
B2B	Business-to-business
BiSS	Open source real-time interface for sensors and actuators (DIN 5008)
CAN	Fieldbus system
c.d.f.	Cyclic duration factor
CDM	Complete drive module including auxiliary equipment (control cabinet)
COMBIVERT	KEB drive controller
COMBIVIS	KEB start-up and parameterizing software
Customer	The customer has purchased a KEB product from KEB and integrates the KEB product into his product (customer product) or resells the KEB product (dealer)
DC	DC current or voltage
DI	Demineralized water, also referred to as deionized (DI) water
DIN	German Institut for standardization
DS 402	CiA DS 402 - CAN device profile for drives
ELV	Extra-low voltage
EMC filter	EMC filters are used to suppress conducted interferences in both directions between the drive controller and the mains
Emergency stop	Shutdown of a drive in emergency case (not de-energized)
Emergency switching off	Switching off the voltage supply in emergency case
EMS	Energy Management System
EN	European standard
Encoder emulation	Software-generated encoder output
End customer	The end customer is the user of the customer product
Endat	Bidirectional encoder interface of the company Heidenhain
EtherCAT	Real-time Ethernet bus system of the company Beckhoff
Ethernet	Real-time bus system - defines protocols, plugs, types of cables
FE	Functional earth
FSoE	Functional Safety over Ethernet
FU	Drive controller
GND	Reference potential, ground
GTR7	Braking transistor
HF filter	KEB specific term for an EMC filter (for description see EMC filter).
Hiperface	Bidirectional encoder interface of the company Sick-Stegmann
HMI	Human machine interface (touch screen)
HSP5	Fast, serial protocol
HTL	Incremental signal with an output voltage (up to 30V) -> TTL
IEC	IEC xxxxx stands for an international standard of the International Electrotechnical Commission
IPxx	Protection class (xx for class)
KEB product	The KEB product is subject of this manual
KTY	Silicium temperature sensor (polarized)
Manufacturer	The manufacturer is KEB, unless otherwise specified (e.g. as manufacturer of machines, engines, vehicles or adhesives)
MCM	American unit for large wire cross sections
Modulation	Means in drive technology that the power semiconductors are controlled
MTTF	Mean service life to failure
NHN	Standard elevation zero; based on the specified height definition in Germany (DHHN2016). The international data generally deviate from this by only a few cm to dm, so that the specified value can be applied to the regionally applicable definition.
OC	Overcurrent
OH	Overheat
OL	Overload

OSSD	Output signal swithching device; - an output signal that is checked in regular intervals on its shutdown. (safety technology)
PDS	Power drive system incl. motor and measuring probe
PE	Protective earth
PELV	Protective Extra Low Voltage
PFD	Term used in the safety technology (EN 61508-1...7) for the size of error probability
PFH	Term used in the safety technology (EN 61508-1...7) for the size of error probability per hour
PLC	Programmable logic controller
Pt100	Temperature sensor with R0=100Ω
Pt1000	Temperature sensor with R0=1000Ω
PTC	PTC-resistor for temperature detection
PWM	Pulse width modulation
RJ45	Modular connector with 8 lines
SCL	Synchronous sensorless closed loop
SELV	Safe extra-low voltage, unearthed
SIL	The safety integrity level is a measure for quantifying the risk reduction. Term used in the safety technology (EN 61508 -1...7)
SS1	Safety function „Safe stop 1“ in accordance with IEC 61800-5-2
SSI	Synchronous serial interface for encoder
STO	Safety function „Safe Torque Off“ in accordance with IEC 61800-5-2
TTL	Logic with 5 V operating voltage
USB	Universal serial bus
VARAN	Real-time Ethernet bus system

List of Figures

Figure 1: Nameplate (exemplary) ... 22
Figure 2: Configurable options ... 23
Figure 3: Switch-off time t depending on overload I/IN (OL) ... 31
Figure 4: Typical overload characteristic in the lower output frequencies (OL2) Example: 28 cm device ... 33
Figure 5: Block diagram of the energy flow ... 43
Figure 6: Switching behaviour of the fans example heat sink fan ... 46
Figure 7: Dimensions built-in version air cooler ... 47
Figure 8: Dimension Push-through version air cooler IP20, IP54-ready ... 48
Figure 9: Dimensions built-in version fluid cooler (water) ... 49
Figure 10: Dimensions push-through version fluid cooler (water) IP20, IP54-ready ... 50
Figure 11: Dimension Built-in version Fluid cooler (water) High performance, IP54-ready ... 51
Figure 12: Dimension Built-in version Fluid cooler (water) High performance, IP54-ready ... 52
Figure 13: Example of an F6 in housing 8 with M10 ring bolts ... 53
Figure 14: Example of an F6 housing 7 with transport brackets ... 53
Figure 15: Mounting distances ... 55
Figure 16: Installation of IP54-ready devices ... 56
Figure 17: Control cabinet ventilation ... 57
Figure 18: Airflow of the drive controller ... 57
Figure 19: F6 housing 7 top view ... 58
Figure 20: F6 housing 7 front view ... 59
Figure 21: F6 housing 7 rear view with control board APPLICATION ... 60
Figure 22: Input circuit ... 61
Figure 23: Terminal block X1A for 400 V devices ... 62
Figure 24: Connection for protective earth ... 63
Figure 25: Connection of the mains supply 3-phase ... 64
Figure 26: Terminal block X1A DC connection ... 65
Figure 27: Connection at DC voltage supply ... 66
Figure 28: Wiring of the motor ... 67
Figure 29: Terminal block X1A motor connection ... 68
Figure 30: Symmetrical motor line ... 69
Figure 31: Terminal block X1C for control board APPLICATION and COMPACT ... 71
Figure 32: Terminal block X1C for control board PRO ... 71
Figure 33: Connection of the brake control ... 72
Figure 34: Connection of a KTY sensor ... 72
Figure 35: Terminal block X1A connection braking resistor ... 74
Figure 36: DC-bus connection ... 77
Figure 37: External heat sink fan supply ... 79
Figure 38: Open pipe ends for the connection of the cooling system ... 84
Figure 39: Volume flow depending on the total power dissipation PD_ges and temperature difference with water-glycol mixture ... 87
Figure 40: Typical pressure drop depending on the volume flow ... 88

Figure 41: Open pipe ends for the connection of the cooling system 92
Figure 42: Volume flow depending on the total power dissipation PD_ges and temperature difference with water-glycol mixture 95
Figure 43: Typical pressure drop depending on the volume flow 96
Figure 44: Nameplate for maritime versions of drive controller 97

List of Tables

Table 1: Part code 21
Table 2: Climatic environmental conditions 24
Table 3: Mechanical environmental conditions 25
Table 4: Further environmental operating conditions 25
Table 5: Device classification 25
Table 6: Electromagnetic compatibility 26
Table 7: Overview of the 400 V device data 28
Table 8: Input voltages and frequencies of the 400V devices 29
Table 9: DC link voltage for 400V devices 29
Table 10: Output voltages and frequencies of the 400V devices 29
Table 11: Example of the calculation of the possible motor voltage: 29
Table 12: Input and output currents / overload of the 400 V devices 30
Table 13: Frequency-dependent maximum current for device size 25 34
Table 14: Frequency-dependent maximum current for device size 25 35
Table 15: Frequency-dependent maximum current for device size 26 36
Table 16: Frequency-dependent maximum current for device size 27 36
Table 17: Frequency-dependent maximum current for device size 28 37
Table 18: Frequency-dependent maximum current for device size 28 37
Table 19: Frequency-dependent maximum current for device size 28 38
Table 20: Overview of rectifier data for 400 V devices 38
Table 21: Power dissipation of the 400 V devices 39
Table 22: AC fusing for 400 V / 480 V devices 39
Table 23: DC Fusing of the 400 V / 480 V devices 40
Table 24: Switching frequency and temperature of the 400 V devices (air cooled) 41
Table 25: Switching frequency and temperature of the 400 V devices (watercooled) 42
Table 26: DC link / braking transistor function of the 400 V devices 44
Table 27: Sub-mounted braking resistors 44
Table 28: Fan 45
Table 29: Switching points of the fans 46
Table 30: Mounting instructions for built-in version 54
Table 31: Mounting instructions for push-through version 54
Table 32: Filters and chokes 80
Table 33: Seal for IP54-ready devices 80
Table 34: Electrochemical series / standard potentials against hydrogen 82
Table 35: Requirements for the coolant 82
Table 36: Special requirements for open and half-open cooling systems 83
Table 37: Coolant temperature 85
Table 38: Dew point table 85
Table 39: Permissible volume flow with water cooling 86
Table 40: Electrochemical series / Standard potentials against hydrogen 90
Table 41: Requirements for the coolant 90
Table 42: Special requirements for open and semi-open cooling systems: 91

Table 43: Coolant temperature 93
Table 44: Dew point table 93
Table 45: Permissible volume flow with water cooling 94



MORE KEB PARTNERS WORLDWIDE:

www.keb-automation.com/contact



Automation **with Drive**

www.keb-automation.com

KEB Automation KG Suedstrasse 38 D-32683 Barntrup Tel. +49 5263 401-0 E-Mail: info@keb.de